High Rigidity High Precision
Reduction Gears

昆山光腾智能机械有限公司
Add：昆山吴淞江北路99号
TEL：+86（0）512-81866498
Fax：+86（0）512-81866067
E-Mail：sales@quantamachinery.com
Website：www.quantamachinery.com

产品改进时，本公司可能在不进行预先告知的情况下变更产品样本，最终解释权归光腾智能机械有限公司
我们致力于提供尽可能严谨周密的信息，但不保证其绝对正确和有效，且不承担由此引发的任何责任。所有信息仅供参考。© 版权所有，所有权保留
V03 EN-ZH

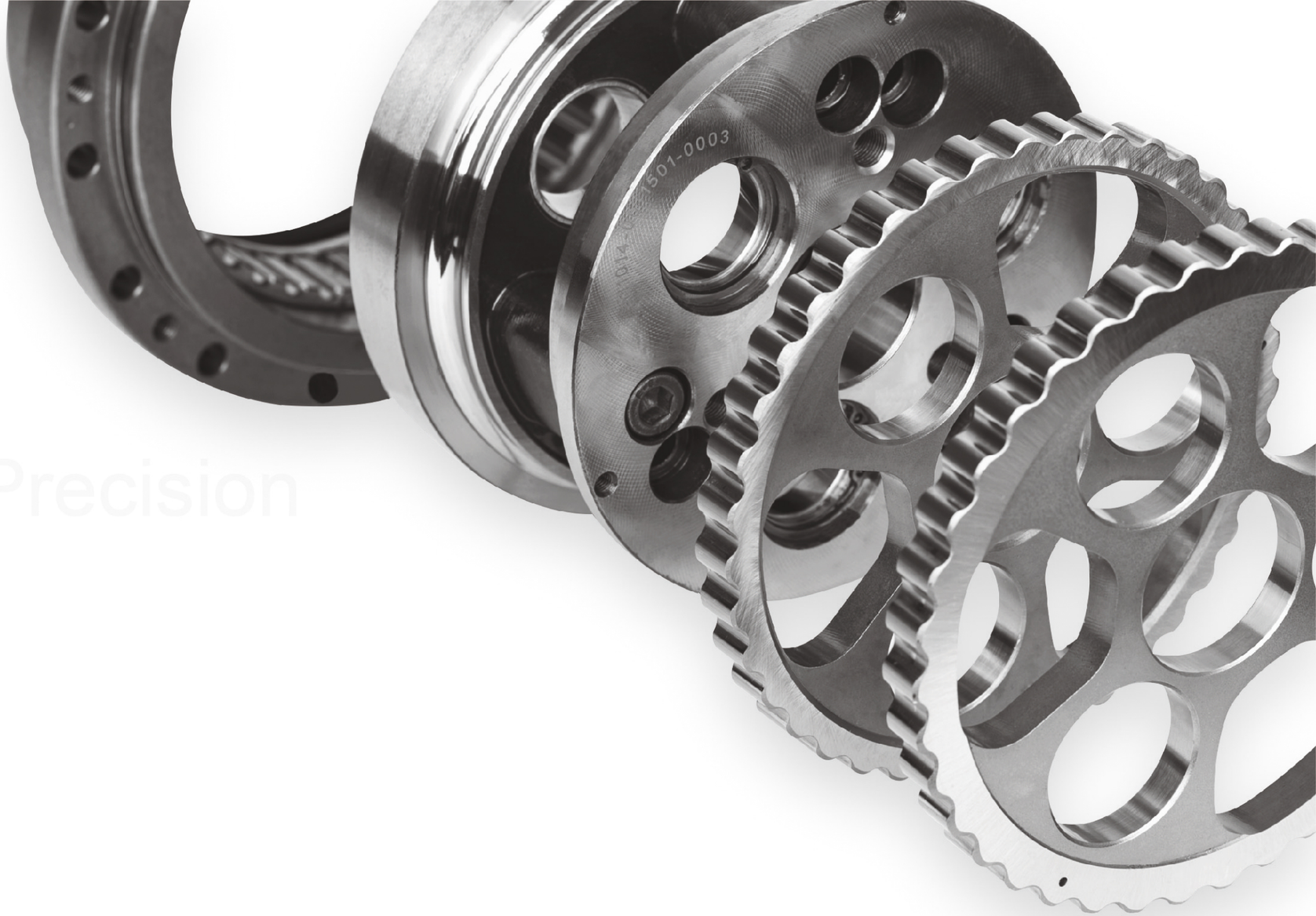

高刚性
精　密
减速机

High Rigidity High Precision Reduction Gears

产品样本
Catalog

光腾智能机械 QUANTA MACHINERY CO.,LTD.
昆山光腾智能机械有限公司
Kunshan Quanta Machinery Co., ltd.

公司简介及技术优势

昆山光腾智能机械有限公司成立于2009年，是国内较早从事于高刚性高精密减速机研发、生产和销售的企业。光腾减速器产品可广泛应用于自动化装备、工业机器人、RGV、AGV、加工设备、医疗设备和其它领域。

1. 先进的加工技术，并已形成多项具有自主知识产权的专利技术；

2. 公司丰富的技术经验为高刚性、高精密减速器的应用提供技术解决方案；

3. 高刚性高精密减速器旨在应用于高速比、高运动精度、零背隙、高转矩、高刚性、结构紧凑和轻量的设计场合。

4. 已开发出多种型号的行星摆线针轮减速器产品，主要技术指标达到国外同类产品水平，可靠性、稳定性遥遥领先于国内其它厂家。

COMPANY PROFILE & ADVANTAGES

QM was built in 2009, and engaged in development, manufacturing and sales of high-rigidity & high precision reduction gears, which have been widely used in the automatic and industrial robots, RGV, AGV, machine tools manufacturing, medical systems and many other fields.

1.Advanced processing technology and serial patents.

2.Technical solutions for high rigidity application, high precision application are achieved by our technical experience.

3.It is aimed to the field of high reduction-gear ratio, high kinematic precision, zero-backlash, high torque capacity, high rigidity, compact design in a limited installation space with low weight.

4.Various types of planetary cycloid reduction gear have been developed, and the main technical indicators have reached the level of foreign similar products. The reliability and stability are far ahead of other domestic manufacturers.

目录
CONTENTS

企业简介及技术优势
Company Profile & Advantages 01

1 应用领域
Application Areas 05

2 工作原理
Operating Principle 06

3 QXB减速机的型号
Ordering Information of QXB Reduction Gears 07

4 旋转方向与减速比
Rotary Direction and Reduction Ratio 11

5 减速机的性能
Performance Characteristics 13

6 QXB减速机选定流程
Selection Flowchart of QXB Rednction Gear 19

7 设计方面注意事项
Installation and Assembly 23

8 使用注意事项
Instructions for Application 27

9 质量保证
Warranty 27

10 维护与保养
Maintenance 27

减速机应用技术参数确认表
Application Worksheet 28

外形尺寸图
External Dimensions 31

瑞士成型磨床（摆线盘磨削）
Outer gear profile grinding machine

瑞士成型磨床（针齿壳磨削）
Internal gear profile grinding machine

进口七轴五联动精密车床（偏心轴及其他）
5-axis-buckling machine

瑞士进口内外圆磨（行星架及其他）
CNC universal cylindrical grinding machine

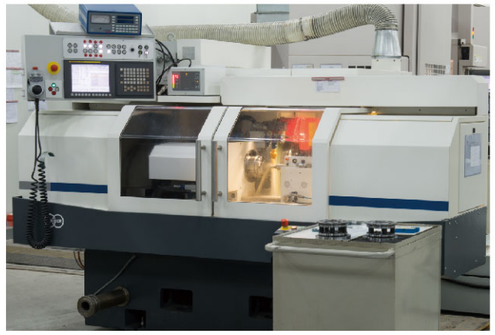

光腾智能机械 QUANTA MACHINERY CO.,LTD.

坐标测量机
Coordinator measurement machine

理化检测
Physical &Chemistry measurement

圆柱度检测仪
Cylindricity measurement machine

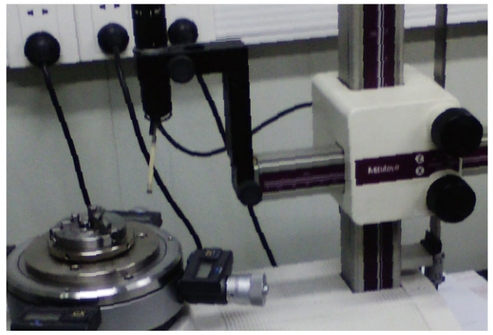

轮廓度检测仪
Profile tolerance measurement machine

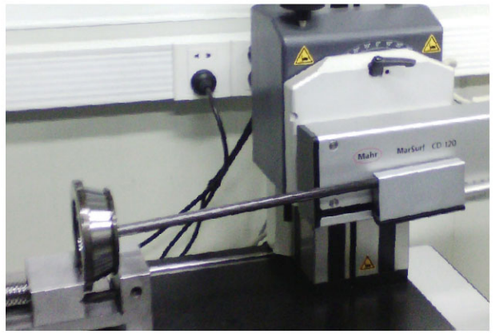

1.应用领域/Application areas

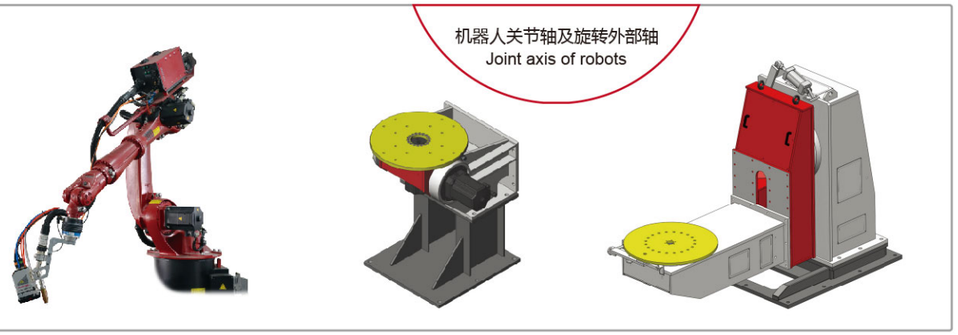

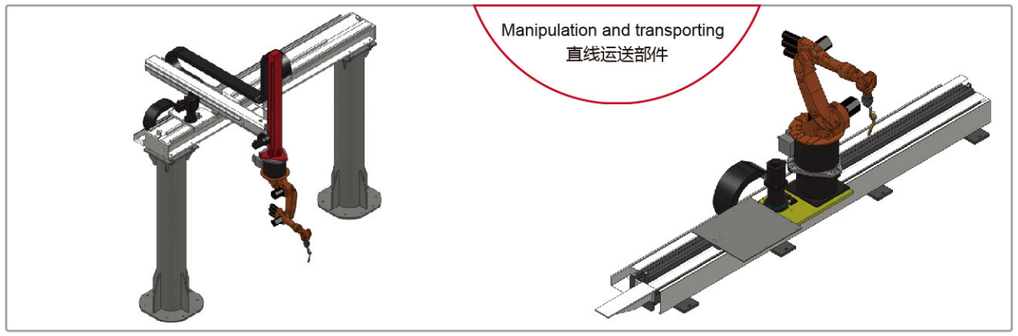

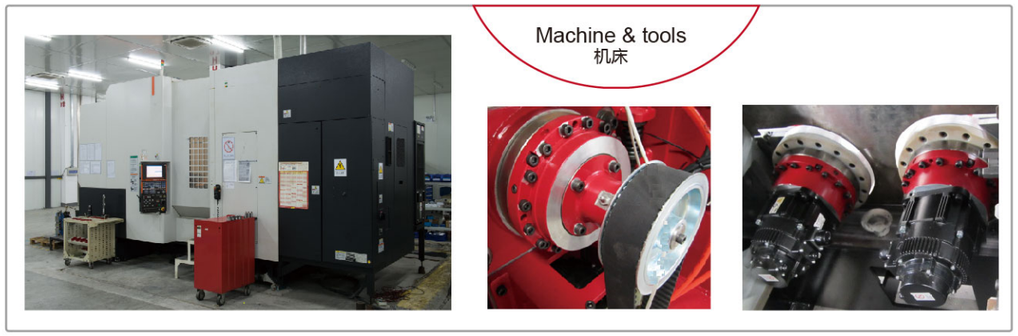

2.工作原理/Operating Principle

2.1 QXB E、C系列减速机为二级减速：

一级减速—行星齿轮减速机构

输入轴的旋转从输入齿轮传递到行星齿轮，按齿数比进行减速，为第一级减速；

二级减速—摆线级减速机构

由行星轮带动旋转的偏心轴驱动两个摆线盘进行偏心运动，摆线盘呈180°对称安装，使其受力均衡。偏心运动促使摆线盘与放置在针齿壳上的针齿销进行啮合。偏心轴旋转一周，摆线盘在相反方向上移动一个针齿位。

2.1 The QXB E and C series is a 2-stage reduction gear:

The first stage—Spur gear reduction

An input gear engages with spur gears that are coupled to crankshafts. Different overall gear ratios can be provided by selecting various first stage ratios.

The second stage—cycloidal gear reduction

Grankshafts driven by the epicyclic gears causes an eccentric motion of two cycloidal gears that are offset by 180 degrees from one another to provide a balanced load. In the course of one revolution of the teeth of two cycolidal gears move the distance of one pin in the opposite direction of the rotating cranks.

2.2 QXB CS系列减速机为一级减速：

减速机构—摆线级减速机构

由偏心轴直接驱动的两个摆线盘进行偏心运动，摆线盘呈180°安装，使其受力均衡，其减速原理同QXB E和C系列减速机的第二级减速相同。

2.2 The QXB CS series is a 1-stage reduction gear:

Reducing mechanism—cycloidal reduction

Grankshaft causes an eccentric motion of two cycloidal gears that are offset by 180 degrees from one another to provide a balanced load. The reduction principle is same to the principle of E and C series reduction gear.

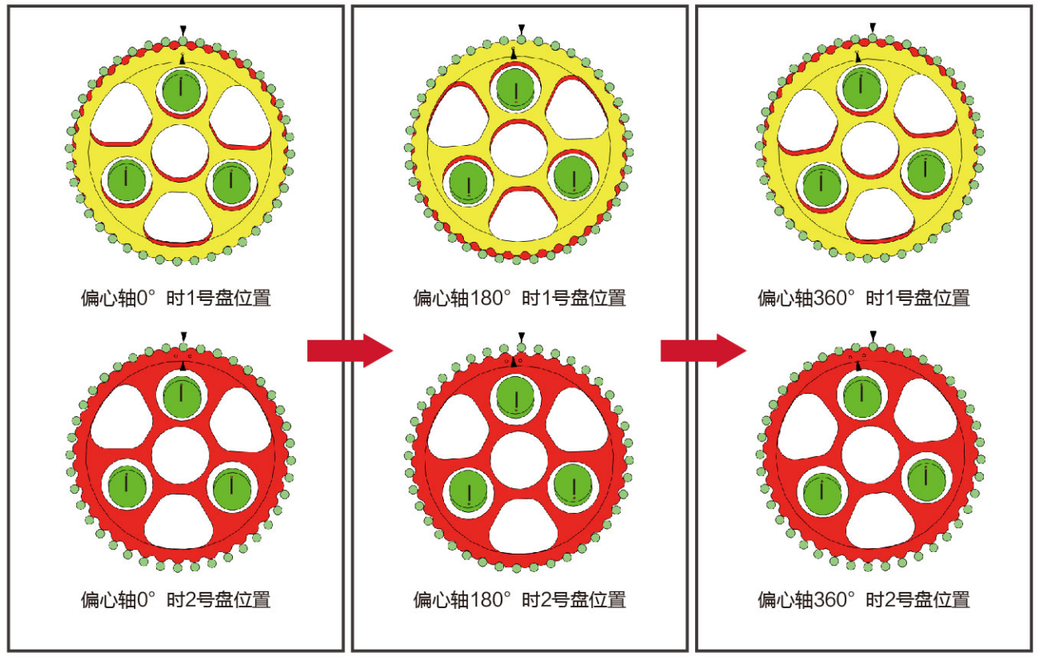

3.QXB减速机的型号/Ordering information of QXB reduction gear

3.1 E系列减速机/E series reduction gear

3.1.1型号说明/Ordering specifications

QXB - 80E - 121

型号 Name	转矩符号 Model	系列 Series	减速比 Reduction ratio	外形尺寸图 External dimensions
QXB	20	E	57,81,105,121,141,161	Page 31
	40		57,81,105,121,153	Page 32
	80		57,81,101,121,153	Page 33
	110		81,111,161,175.28	Page 34
	160		81,101,129,145,171	Page 35
	320		81,101,118.5,129,141,171,185	Page 36

3.1.2结构/Construction

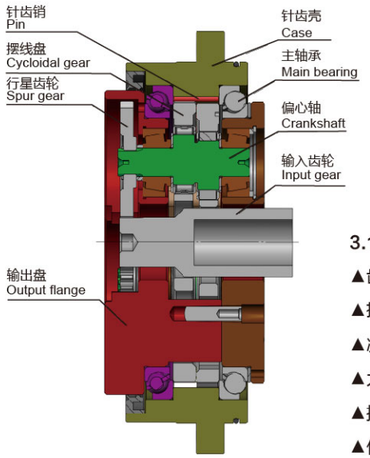

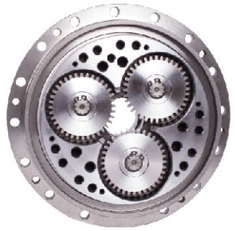

3.1.3优点/Characteristics

▲齿隙小
▲扭转刚性大
▲减速比大
▲力矩刚性、容许力矩大
▲振动小
▲传动效率高
▲磨耗小、寿命长
▲耐冲击强（5倍额定扭矩）

▲low backlash
▲higher torsional rigidity
▲high reduction ratios
▲high moment and maximum allowable moment
▲less vibration
▲high efficiency
▲low wear and longer life
▲higher shock load capability (5times rated torque)

3.2 C系列减速机/C series reduction gear

3.2.1型号说明/Ordering specifications

QXB - 100C - 36.75

型号 Name	转矩符号 Model	系列 Series	减速比 Reduction ratio	外形尺寸图 External dimensions
QXB	100	C	36.75	Page 37

3.2.2结构/Construction

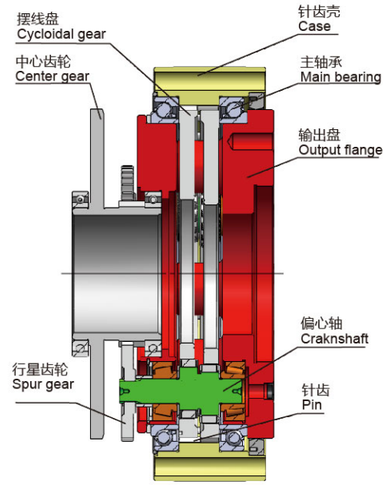

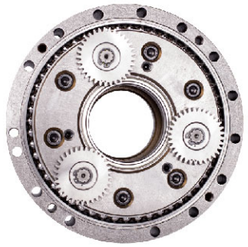

3.2.3优点/Characteristics

▲齿隙小
▲扭转刚性大
▲减速比大
▲力矩刚性、容许力矩大
▲振动小
▲传动效率高
▲磨耗小、寿命长
▲中空部可穿插电缆，节省空间
▲耐冲击强（5倍额定扭矩）

▲low backlash
▲higher torsional rigidity
▲high reduction ratios
▲high moment and maximum allowable moment
▲less vibration
▲high effeciency
▲low wear and longer life
▲cables and other lines can pass through the reduction gear,saving space
▲higher shock load capability (5times rated torque)

3.3 CS系列减速机/CS series reduction gear

3.3.1 型号说明/Ordering specifications

QXB - 80CS - 39

型号 Name	转矩符号 Model	系列 Series	减速比 Reduction ratio	外形尺寸图 External dimensions
QXB	40	CS	19，39	Page 38
	80		39	

3.3.2结构/Construction

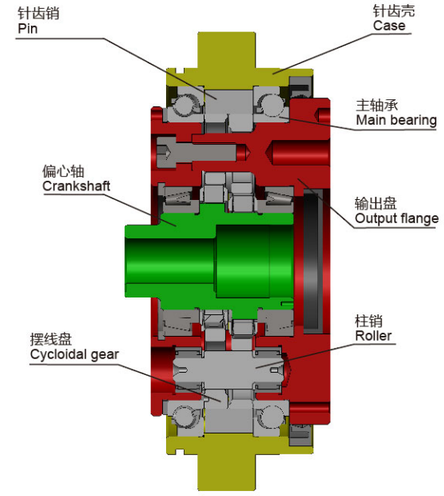

3.3.3优点/Characteristics

▲ 结构紧凑
▲ 扭转刚性高
▲ 惯性力矩小
▲ 抗冲击性能强
▲ 效率高
▲ 启动力矩低
▲ 易安装
▲ 寿命长

▲ compact structure
▲ higher torsional rigidity
▲ low moment of inertia
▲ strong impact resistance
▲ high efficiency
▲ low starting torque
▲ easy installation
▲ longer life

光腾智能机械 QUANTA MACHINERY CO.,LTD.

3.4 QXB减速机额定值表/rating table of QXB reduction gear

输出转速(r/min)			5		10		15		20		25		30		40		50		60										
型号	速比		输出转矩	输入功率	输出转矩	输入功率	输出转矩	输入功率	输出转矩	输入功率	输出转矩	输入功率	输出转矩	输入功率	输出转矩	输入功率	输出转矩	输入功率	输出转矩	输入功率	力矩刚性	反转启动转矩	允许力矩	瞬时最大力矩	启动、停止时的最大转矩	瞬时最大转矩	空程	扭矩刚度	惯性力矩（减速机本体）	重量
	输出盘输出	针齿壳输出	Nm	KW	Nm	KW	Nm	KW	Nm	KW	Nm	KW	Nm	KW	Nm	KW	Nm	KW	Nm	KW	Nm/arc.min	Nm	Nm	Nm	Nm	Nm	Arc.min	Nm/arc.min	$Kg\cdot m^2$	Kg
QXB 20E	57	56	231	0.16	188	0.26	167	0.35	153	0.43	143	0.50	135	0.57	124	0.70	115	0.81	110	0.92	372	42	882	1764	412	833	1	49	$9.66x10^{-6}$	4.7
	81	80																											$6.07x10^{-6}$	
	105	104																											$4.32x10^{-6}$	
	121	120																											$3.56x10^{-6}$	
	141	140																											$2.88x10^{-6}$	
	161	160																											$2.39x10^{-6}$	
QXB 40E	57	56	572	0.40	465	0.65	412	0.86	377	1.05	353	1.23	334	1.40	307	1.71	287	2.00	271	2.27	931	47	1666	3332	1029	2058	1	108	$3.25x10^{-5}$	9.3
	81	80																											$2.20x10^{-5}$	
	105	104																											$1.63x10^{-5}$	
	121	120																											$1.37x10^{-5}$	
	153	152																											$1.01x10^{-5}$	
QXB 80E	57	56	1008	0.76	885	1.24	784	1.64	719	2.01	672	2.35	637	2.67	584	3.26	546	3.81	517	4.33	1176	70	2156	4312	1960	3920	1	196	$8.16x10^{-5}$	13.1
	81	80																											$6.00x10^{-5}$	
	101	100																											$4.82x10^{-5}$	
	121	120																											$3.96x10^{-5}$	
	153	152																											$2.98x10^{-5}$	
QXB 110E	81	80	1499	1.05	1215	1.70	1078	2.26	990	2.76	925	3.23	875	3.67	804	4.49					1470	80	2940	5880	2695	5390	1	294	$9.88x10^{-5}$	17.4
	111	110																											$6.96x10^{-5}$	
	161	160																											$4.36x10^{-5}$	
	175.28	174.28																											$3.89x10^{-5}$	
QXB 160E	81	80	2176	1.52	1774	2.48	1568	3.28	1441	4.02	1343	4.69	1274	5.34							2940	110	3920	7840	3920	7840	1	392	$1.77x10^{-4}$	26.4
	101	100																											$1.40x10^{-4}$	
	129	128																											$1.06x10^{-4}$	
	145	144																											$0.87x10^{-4}$	
	171	170																											$0.74x10^{-4}$	
QXB 320E	81	80	4361	3.04	3538	4.94	3136	6.57	2881	8.05	2695	9.41	2548	10.7							4900	220	7056	14112	7840	15680	1	980	$4.83x10^{-4}$	44.3
	101	100																											$3.79x10^{-4}$	
	118.5	117.5																											$3.15x10^{-4}$	
	129	128																											$2.84x10^{-4}$	
	141	140																											$2.54x10^{-4}$	
	171	170																											$1.97x10^{-4}$	
	185	184																											$1.77x10^{-4}$	
QXB 100C	36.75		1362	0.95	1107	1.55	980	2.05	899	2.51	841	2.94	796	3.33	730	4.08					2813	120	2450	4900	2450	4900	1	510	$0.47x10^{-3}$	19.5
QXB 40CS	19	20	572	0.37	465	0.61	412	0.81	377	0.99	353	1.16	334	1.31	307	1.61	287	1.88	271	2.13	931	45	1666	3332	1029	2058	3	80	$2.38x10^{-4}$	9.3
	39	40																											$2.11x10^{-4}$	9.4
QXB 80CS	39	40	1088	0.71	885	1.16	784	1.54	719	1.88	672	2.20	637	2.50	584	3.06	546	3.57	517	4.06	1176	65	2156	4132	1960	3920	3	140	$5.27x10^{-4}$	13.5

注：1.输出额定转速15r/min；
2.额定转矩指的是在输出转速15r/min时的输出转矩。

4.旋转方向与减速比/Rotary direction and reduction ratio

在QXB减速机的应用中，不同的输入与输出方式可以得到不同的减速比，下面列出了QXB减速机E、C系列的旋转方向及减速比。在下面公式中，i表示减速比。并且“+”表示输入与输出方向相同，“−”表示输入与输出方向相反。E系列速比值R可按下面公式进行计算：

$$R=1+\frac{Z_2}{Z_1}\cdot Z_4$$

R ： 速比值/speed ratio

Z_2： 行星轮齿数/ number of teeth on spur gear

Z_4： 针齿销数/number of pins

In the application of QXB reduction gear，different ways of input and output can achieve different ratios. The figures show the rotary direction and reduction ratio of E, C series respectively. In the following equations, i represents the reduction ratio. And “+” represents input and output rotation in one direction, “-” represents input and output rotation in the opposite direction.

The value of E series can be calculated as follows:

Z_1：输入齿轮齿数/number of teeth on input gear

Z_3：摆线盘齿数/ number of teeth on cycloidal gear

E系列减速机的旋转方向与减速比

Rotary direction and reduction ratio of E series

减速 Speed reduction	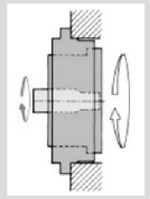	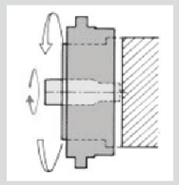	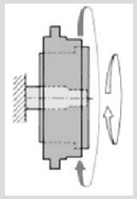
	固定/fixed: 针齿壳/case **输入/input:** 输入轴/input shaft **输出/output:** 输出盘/output flange	**固定/fixed:** 输出盘/output flange **输入/input:** 输入轴/input shaft **输出/output:** 针齿壳/case	**固定/fixed:** 输入轴/input shaft **输入/input:** 针齿壳/case **输出/output:** 输出盘/output flange
	i=1/R	i=−1/(R−1)	i=(R−1)/R
加速 Speed acceleration	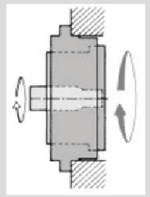	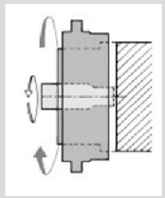	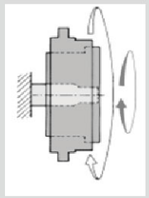
	固定/fixed: 针齿壳/case **输入/input:** 输出盘/output flange **输出/output:** 输入轴/input shaft	**固定/fixed:** 输出盘/output flange **输入/input:** 针齿壳/case **输出/output:** 输入轴/input shaft	**固定/fixed:** 输入轴/input shaft **输入/input:** 输出盘/output flange **输出/output:** 针齿壳/case
	i=R	i=− (R−1)	i=R/(R−1)

C系列速比值R可按下面公式进行计算：

The value of C series can be calculated as follows:

$$R_1=1+\frac{Z_4}{Z_3}\cdot\left(2\times Z_6\right)$$

$$R=R_1\times\frac{Z_2}{Z_1}$$

R：总速比值/overall speed ratio

R_1：减速机内部固有速比值/ speed ratio of a discrete reduction gear

Z_1：输入齿轮齿数/number of teeth on input gear

Z_2：中心齿轮大齿轮数/ number of teeth on large center gear

Z_3：中心齿轮小齿轮数/ number of teeth on small center gear

Z_4：行星齿轮齿数/ number of teeth on spur gear

Z_5：摆线盘齿数/ number of teeth on cycloidal gear

Z_6：针齿销数/number of pins

C系列减速机的旋转方向与减速比

Rotary direction and reduction ratio of C series

减速 Speed reduction	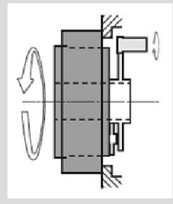	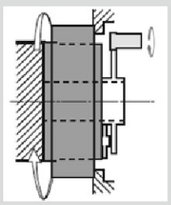	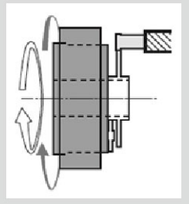
	固定/fixed: 针齿壳/case **输入/input:** 输入轴/input shaft **输出/output:** 输出盘/output flange	**固定/fixed:** 输出盘/output flange **输入/input:** 输入轴/input shaft **输出/output:** 针齿壳/case	**固定/fixed:** 输入轴/input shaft **输入/input:** 针齿壳/case **输出/output:** 输出盘/output flange
	i=1/R	i=−1/(R−1)	i=(R−1)/R
加速 Speed acceleration	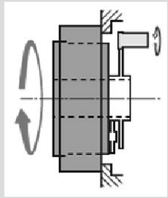	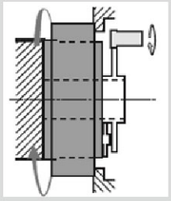	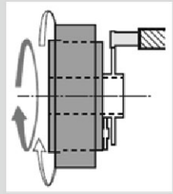
	固定/fixed: 针齿壳/case **输入/input:** 输出盘/output flange **输出/output:** 输入轴/input shaft	**固定/fixed:** 输出盘/output flange **输入/input:** 针齿壳/case **输出/output:** 输入轴/input shaft	**固定/fixed:** 输入轴/input shaft **输入/input:** 输出盘/output flange **输出/output:** 针齿壳/case
	i=R	i=− (R−1)	i=R/(R−1)

5.减速机的性能/Performance characteristics

5.1 QXB系列减速机的寿命计算

QXB减速机的寿命取决于偏心轴轴承的使用寿命。对于所有型号和传动比的减速机，当在额定输出转速和额定转矩（额定值表*所示，见第9页）下工作时，其使用寿命设定为K=L_{10}=6000小时。但在实际使用中，由于负载和使用条件不同，减速机的实际使用寿命可以根据如下公式计算：

$$L_h = K \times \frac{N_o}{N_m} \times \left(\frac{T_o}{T_m}\right)^{\frac{10}{3}}$$

K — 6000额定寿命（h）
L_h — 所求寿命时间（h）
N_o — 额定输出转速（r/min）
N_m — 平均输出转速（r/min）
T_o — 额定转矩（Nm）
T_m — 平均负载转矩（Nm）

5.1 Service life calculation QXB series

The service life of QXB reduction gear is base on the life of the bearings on crankshafts. The service life of all model and ratios are set K=L_{10}=6000h when the reduction gears work at rated speed and torque (shows in the rated table, see page 9). Inactual application, the service life will be changed due to different load and condition. The actual life can be calculated by the following formula.

K — 6000 rated life(h)
L_h — service life to be calculated(h)
N_o — rated output speed(r/min)
N_m — average output speed(r/min)
T_o — rated torque(Nm)
T_m — average output torque(Nm)

5.2启动、停止时的最大转矩

在启动和停止时，由于载荷的惯性转矩作用，会施加一个大于额定数值的转矩，额定值表中给出了启动和停止时的允许转矩。

5.2 Maximum torque during acceleration and braking

Due to inertial loads applied during acceleration and braking is larger than the rated value. The maximum allowable torque, when the reducers start or stop is shown in table of chapter 3.1.4.

5.3瞬时最大转矩

由于减速机的急停或者外部载荷的冲击，减速机会承受比额定转矩更大的转矩。在减速机使用时，瞬时最大转矩不能超过规定值，并且不能超过限制次数。QXB系列减速机的瞬时最大转矩如额定表3.1.4中所示，冲击允许作用次数可以按照下面公式计算。

$$C_{em} = \frac{775 \times \left(\frac{5 \times T_o}{T_{em}}\right)^{\frac{10}{3}}}{Z_4 \times \frac{N_{em}}{60} \times t_{em}}$$

5.3 Momentary maximum torque

Emergency stop and shock load may be accompanied by torque values higher than the nominal value。Momentary maximum torque should be lower than the rated value, and cannot beyond the limited cycle. The rate momentary maximum torque of QXB series reduction gears is shown in the table of chapter 3.1.4. The number of allowable operation cycles can be calculated as follows:

Z_4 ：针齿数/ the number of pins
C_{em} ：允许作用次数/ the number of allowable operation cycles
T_0 ：额定转矩/ rated torque(Nm)
T_{em} ：急停转矩/emergency torque(Nm)
N_{em} ：平均输入转速/ Average input speed(r/min)
T_{em} ：急停时间/ emergency time(sec.)

光腾智能机械 QUANTA MACHINERY CO.,LTD.

5.4 力矩刚性

在QXB系列减速机上有着成对安装的角接触球轴承，此种结构可以使减速机同时承受外部的轴向及径向载荷。并且减速机的力矩刚性即为主轴承的刚性，用倾斜单位角度(1 arc.min)所需的载荷力矩表示。

QXB系列减速机的输出盘倾斜角度可以用下面公式进行计算。

$$\theta = \frac{F_1 \cdot L_1 + F_2 \cdot L_2}{M_t \times 10^3}$$

θ — 输出盘的倾斜角度（arc.min）
M_t — 力矩刚性（Nm/arc.min）
F_1 — 径向载荷（N）
L_1 — 到径向载荷作用点的距离（mm）
F_2 — 轴向载荷（N）
L_2 — 到轴向载荷作用点的距离（mm）

5.4 Moment rigidity

The QXB series reduction gears contact two angular contact ball bearings. The structure makes reducers support the external loads (containing Radial load and axial load). So the moment rigidity of reducers equal to the bearings, which is required to deflect the output shaft 1 arc.min.

The tilting angle of the output flange can be calculated as follows:

θ — output flange tilting angle (arc.min)
M_t — Moment rigidity (Nm/arc.min)
F_1 — Radial load(N)
L_1 — Arm length to the radial load point(mm)
F_2 — Axial load(N)
L_2 — Arm length to the axial load point(mm)

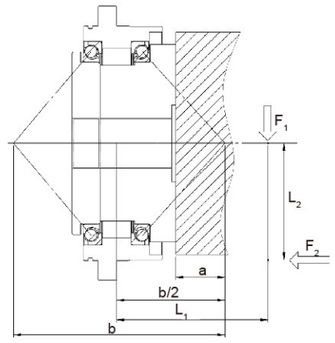

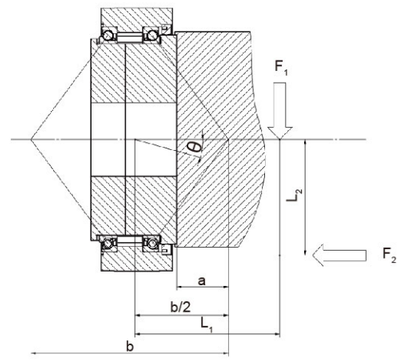

型号/model	尺寸/size(mm)	
	a	b
QXB 20E	20.1	113.3
QXB 40E/40CS	29.6	143.7
QXB 80E/80CS	33.4	166
QXB 110E	32.2	176.6
QXB 160E	47.8	210.9
QXB 320E	56.4	251.4
QXB 100C	58.7	207.6

5.5 输出端的许用轴向载荷和力矩

减速机运转时，负载力矩和轴向载荷须小于减速机的允许值。下表给出了QXB 系列减速机的允许轴向载荷值，额定表格（3.1.4章，第9页）中给出了力矩值，并且实际负载力矩Mc可以通过下式进行计算。

5.5 Allowable thrust load and tilting moment of the output flange

The external moment values and allowable thrust load should be supported by QXB reduction gears. As follow the table, it shows the allowable thrust of QXB series, and the rated table(Chapter 3.1.4,Page 9) shows the allowable moment. The external moment can be caculated as follows:

$$M_c=F_1\cdot\left(L_1+\frac{b}{2}\right)+F_2\cdot L_2$$

型号/model	允许轴向载荷 Allowable axial load(N)	型号/model	允许轴向载荷 Allowable axial load(N)
QXB 20E	3920	QXB 160E	14700
QXB 40E/40CS	5194	QXB 320E	19600
QXB 80E/80CS	7840	QXB 100C	13720
QXB 110E	10780		

当负载力矩和轴向载荷同时作用时，须在允许力矩线图范围内使用。允许力矩线图如下图所示。例如：QXB 80E 减速机在保证15rpm 和 6000h 的寿命情况下，假如其负载力矩为 1660Nm，那么减速机所受的轴向载荷最大为 7840N。请注意选择合适的负载力矩和轴向载荷。

Refer to figure indicating the range of allowable moment for simultaneous application of external moment and external thrust. For example, the product of QXB 80E, at an output speed of 15rpm and L_{10}=6000(h), if the allowable moment is Mc=1660Nm, then the axial load may be max 7840N. Please choose the right moment and axial load.

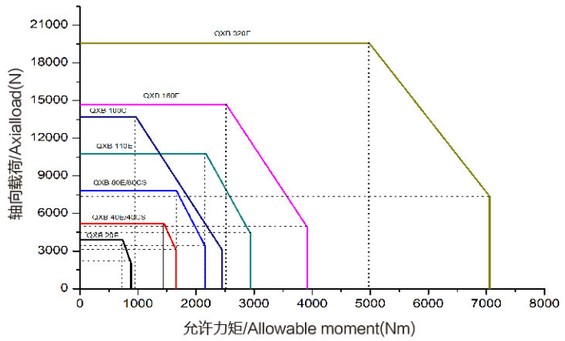

5.6 扭转刚度，空行程和背隙

当输入轴和针齿壳固定时，扭矩加载在输出盘时，会出现如图所示的回滞曲线的形状。减速机的刚度是通过扭转刚性和空行程来衡量的。

扭转刚度=b/a。

空行程是输出盘在回滞曲线的中心线上测定的±3%额定扭矩的偏转角度。

背隙是当负载扭矩为零时，回滞曲线对应的偏转角度。

5.6 Torsional rigidity, lost motion and backlash

When torque is applied to the output flange while the input shaft and the case are fixed, torsion is generated according to the torque value and a hysteresis curve result is shown in the figure.

The rigidity of reduction gear is expressed by the torsional rigidity and lost motion in this curve.

Torsional rigidity =b/a

Lost motion: Lost motion is the torsion angle at midddle point of the hysteresis curve width at ±3% of rated torque.

Backlash: The torsion angles when the torque indicated by the hysteresis curve is zero.

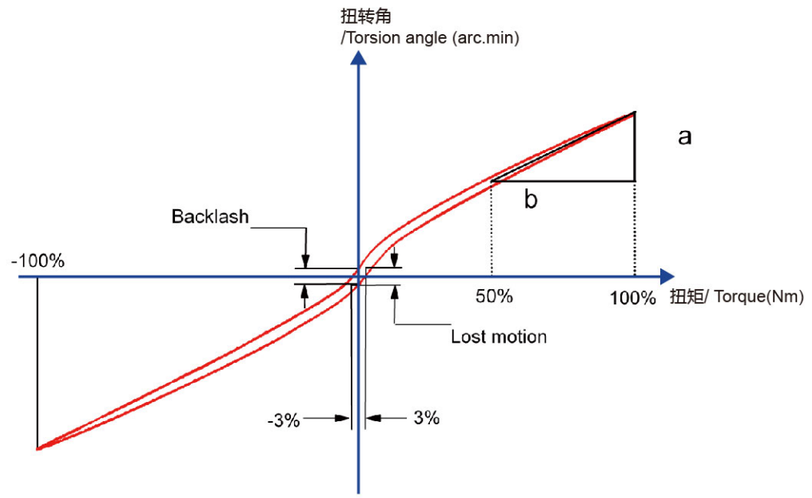

QXB系列减速机的回滞曲线
Hysteresis curve of gear reducers

5.7 振动

振动是由减速机驱动的惯性负载在圆周方向的扭转引起的，也称扭转振动。对于某些需要高精度轮廓加工的应用，低振动是非常重要的。例如，机器人底部关节工具中心点必须尽可能近的沿既定轨道运转。如果关节振动，轨道追踪会非常不准确。机床的附加轴是另一个实例，它要求减速机运转非常平顺。

5.7 Vibration

The vibration is a torsional vibration indicated in the circumferential direction of an inertia load driven by the reduction gear. Low vibration is extremely important for applications where high precision contouring is required. For example, the tool center point of the end point of robot has to follow desired trajectory as close as possible. If robot joints vibrate, the trajectory tracking is poor. Added axe of a machine tool is another application example when very high running smoothness of a reduction gears is required.

5.8 角度传递误差

角度传输误差是在任意输入旋转角度的基础上，理论上旋转输出角度和实际输出角度之间的差异。可通过下面公式进行计算。

5.8 Angular transmission accuracy

Angular transmission accuracy refers to a difference between the theoretical output revolution angle and the actual revolution angle (θout) when any revolution angle is the input, and is expressed as an angular transmission error.

$$\theta_{er}=(\theta_{in}/R-\theta_{out})\cdot 3600$$

θ_{er} — 角度传递误差(秒)
θ_{in} — 输入旋转角度(度)
θ_{out} — 实际输出角度(度)
R — 速比值

θ_{er} — angular transmission accuracy(arc • sec)
θ_{in} — input revolution angle(degrees)
θ_{out} — output revolution angle(degrees)
R — speed ratio

5.9 无负载运行转矩

在输出端无负载的情况下，运转减速机所需的输入轴扭矩即为无负载运行扭矩。下图为 QXB 系列减速机在无负载运行时的输出端转矩。QXB E 和 CS 系列减速机的无负载运行转矩可以通过下面公式换算。

$$T_m = \frac{\text{输出端转矩}}{R}$$

5.9 No-load running torque

The no load running torque means a torque required to start rotation of the input shaft, if no load is applied to the output flange. Fig shows no load running torque on the output flange of QXB series reduction gears, and the no load running torque of QXB E and CS series on the input shaft can be calculated as follows:

No load running torque on the input shaft= (output torque)/R Nm

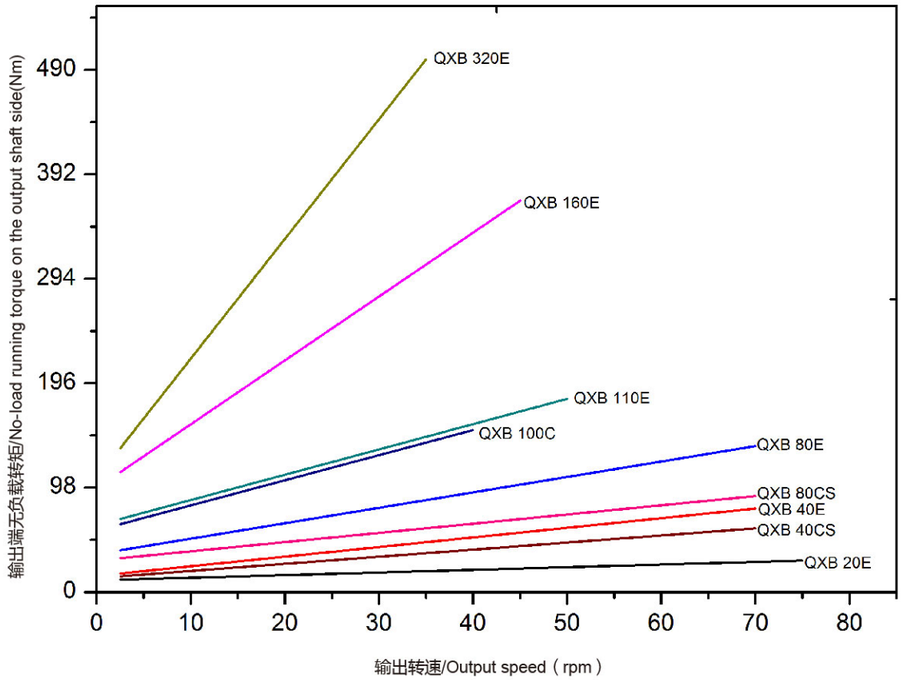

QXB 系列减速机无负载启动转矩
No load running torque on the output flange of QXB series reducers

QXB C系列减速机在无负载运行转矩可以通过下面公式进行换算。

$$T_m = \frac{\text{输出端转矩}}{R} + \text{中心齿轮运转阻力}$$

The no load running torque of QXB C series can be calculted as following:

No load running torque on the input shaft= (output torque)/R + center gear of no load running torque

T_m ：输入轴无负载运行转矩/ No load running torque on the input shaft

R ：总速比值/ overall speed ratio

5.10 反转启动转矩

反转启动转矩是指在无负载的情况下，为启动输入轴而施加在输出端的转矩。作用在输出端的转矩等于或大于反转启动扭矩时，输入轴在无固定的状态下可增速旋转。QXB 系列减速机的反转启动转矩可在额定值表中查询。

5.10 Back-driving torque

Back-driving torque is the torque applied on the output flange that is required to start rotation of the input shaft under no load. If the input shaft is released while a torque equal to or more than the back-driving torque applied to output flange, the input shaft starts running at an augmented speed. The chapter 3.1.4 shows the QXB series of back-driving torque.

5.11 效率表

QXB减速机的的效率决定于减速机的型号、负载、温度、装配精度等。下图为QXB减速机的效率曲线。

测试环境：

1、针齿壳温度：30℃

2、装配精度：建议精度

3、润滑：Molywhite RE00 润滑油

5.11 Efficiency chart

The efficiency of the QXB reduction gears depends on the QXB model, load, temperature, and assembly accuracy. The fig shows the efficiency curves of the QXB reduction gears.

Test condition:

1、the case temperature: 30℃

2、assembly accuracy: recommended accuracy

3、lubricant: grease(Molywhite RE00)

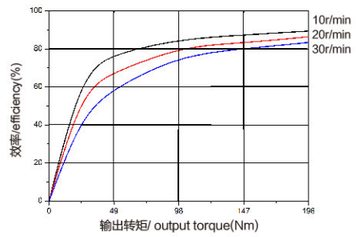

QXB 20E效率曲线

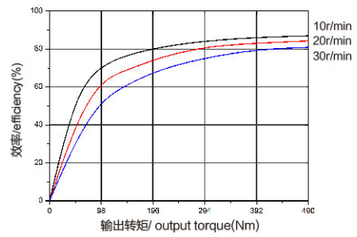

QXB 40E效率曲线

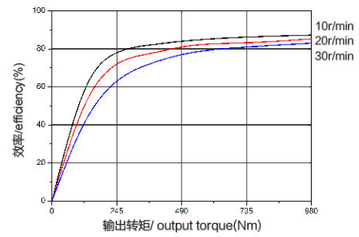

QXB 80E效率曲线

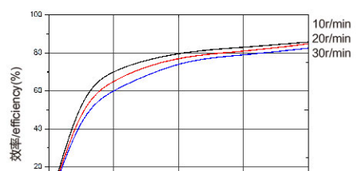

QXB 110E效率曲线

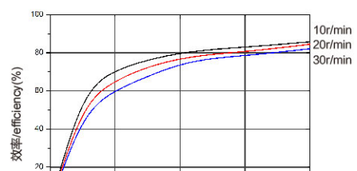

QXB 160E效率曲线

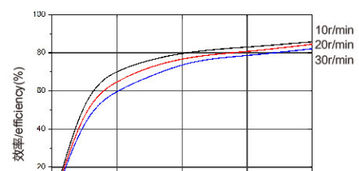

QXB 320E效率曲线

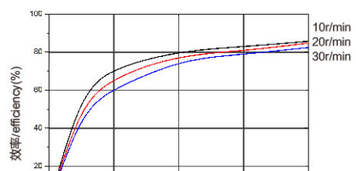

QXB 100C效率曲线

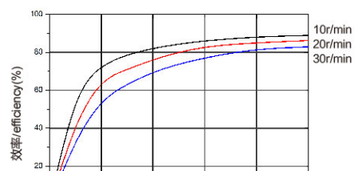

QXB 40CS效率曲线

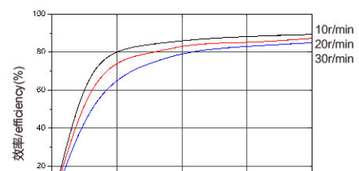

QXB 80CS效率曲线

6.QXB减速机选定流程/Selection flowchart of QXB reduction gear

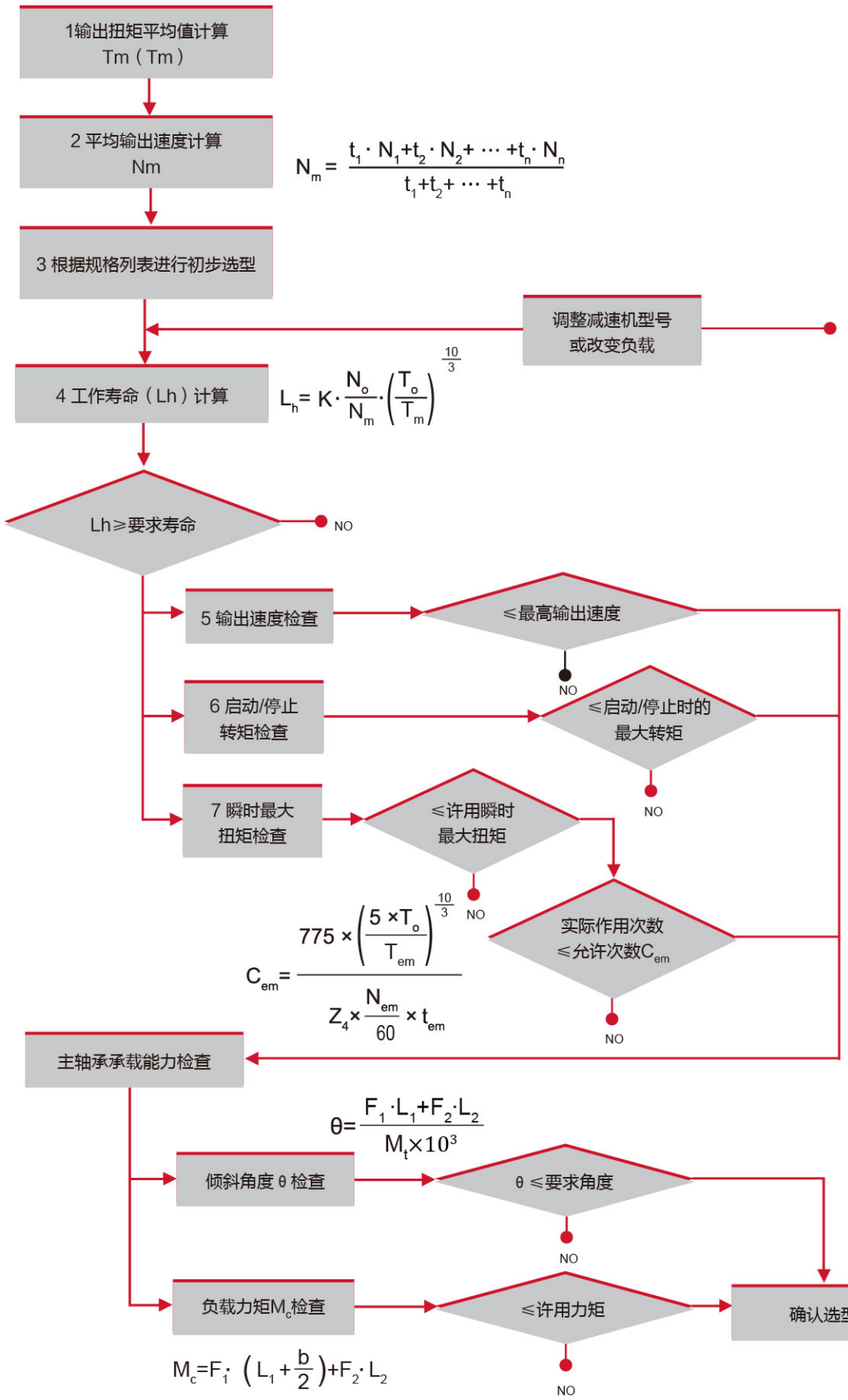

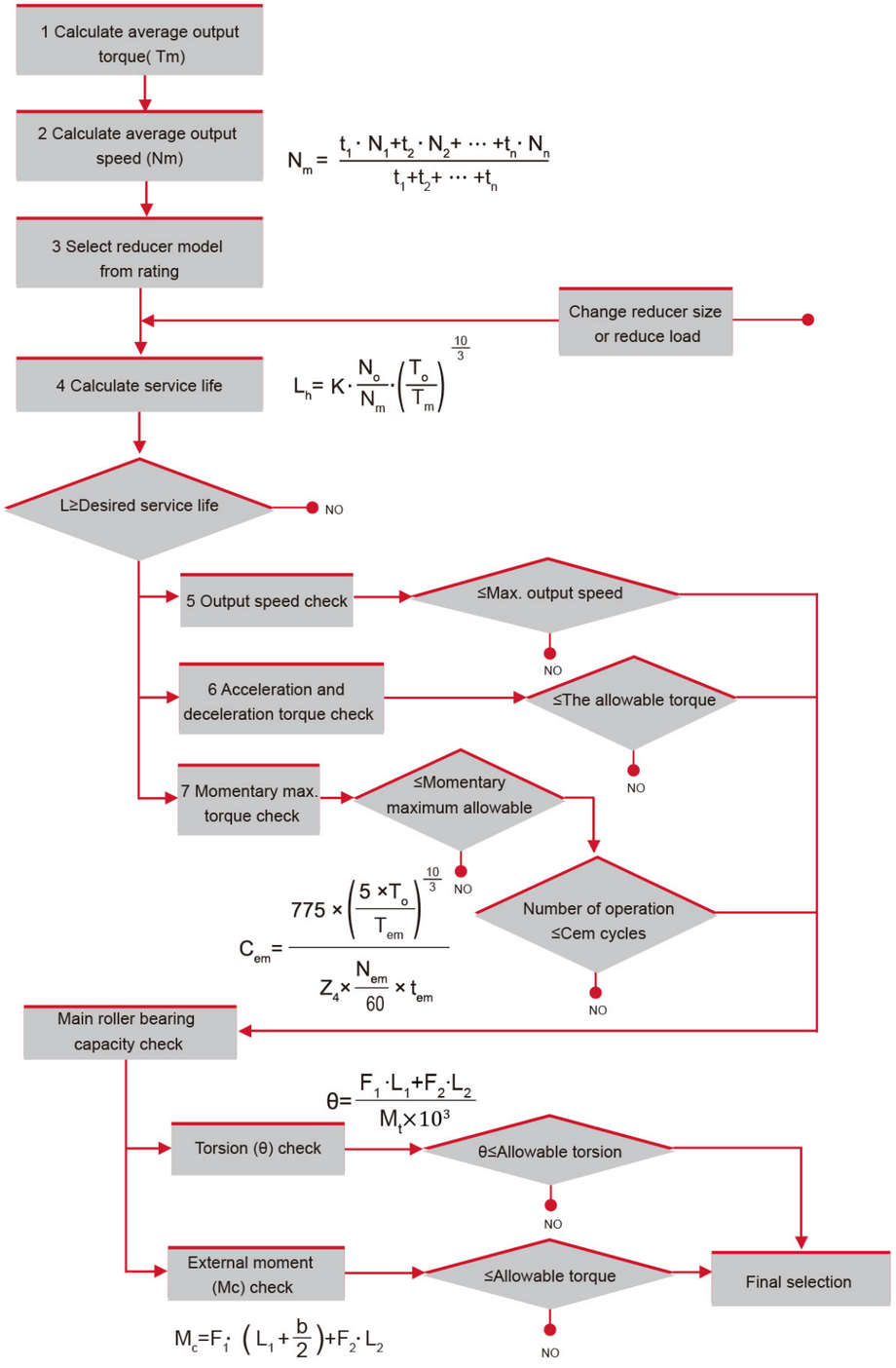

6.1选型示例/selection example

启动时负载转矩	T_1=1000 Nm	Acceleration torque
稳定时负载转矩	T_2=500 Nm	Constant torque
停止时负载转矩	T_3=800 Nm	Breaking torque
瞬时最大转矩	T_{em}=4000 Nm	Momentary max. torque
启动时平均转速	N_1= 10 rpm	Average acceleration input speed
稳定时转速	N_2=15 rpm	Constant input speed
停止时平均转速	N_3=10 rpm	Average breaking input speed
加速时间	t_1=0.2 sec.	Acceleration time
稳定运转时间	t_2=0.5 sec.	Constant time
减速时间	t_3=0.2 sec.	Breaking time
径向载荷	F_1=1500 N	Radial load
到径向载荷作用点的距离	L_1=500 mm	Arm length to the radial load point
轴向载荷	F_2=800 N	Axial load
到轴向载荷作用点的距离	L_2=200 mm	Arm length to the axial load point
针齿数	Z_4=40	The number of pins

6.2 计算平均输出转矩T_m /Calculate average output torque T_m

$$T_m=\sqrt[\frac{10}{3}]{\frac{0.2\times10\times1000^{\frac{10}{3}}+0.5\times15\times500^{\frac{10}{3}}+0.2\times10\times800^{\frac{10}{3}}}{0.2\times10+0.5\times15+0.2\times10}}=713\text{Nm}$$

6.3 计算平均输出转速 N_m /Calculate average output speed N_m

$$N_m=\frac{0.2\times10+0.5\times15+0.2\times10}{0.2+0.5+0.2}=12.78\text{rpm}$$

6.4 根据QXB减速机额定表格暂定减速机：QXB 80E−121
/Preliminary gear selection from the QXB rating table: QXB 80E−121

QXB 80E−121减速机额定数值
The rating date of QXB 80E−121

额定转矩	784 Nm	Rated torque
最大输出转速	60 rpm	Max. output speed
启动停止时的最大转矩	1960 Nm	Allowable acceleration/deceleration torque
瞬时最大许用转矩	4312 Nm	Momentary max. allowable torque

6.5 计算减速机的寿命L_h/Calculate the service life L_h

$$L_h=6000\times\frac{15}{15.6}\times\left(\frac{784}{13}\right)^{\frac{10}{3}}=9724\text{h}$$

6.6 输出转速检查/ Output speed check

N2=15rpm<70rpm ok

6.7 启动和停止时的转矩检查 T_1,T_3/ Accelerating and breaking torque check T_1,T_3

T1=1000Nm<1960Nm ok
T3=800Nm<1960Nm ok

6.8 急停时的转矩检查 T_{em}/ Emergency breaking torque check T_{em}

Tem=4000Nm<4312Nm

$$<C_{em}=\frac{775\times\left(\frac{5\times784}{4000}\right)^{\frac{10}{3}}}{40\times\frac{15}{60}\times0.05}=1449$$

6.9 力矩刚性检查/ Rigidity moment check

$$\theta=\frac{1500\times500+800\times200}{1176\times1000}=0.77\text{ arc.min ok}$$

6.10 负载力矩检查 M_c/ External moment check M_c

$$M_c=800\times\left(500+\frac{210.9}{2}\right)\times10^{-3}+1500\times0.2=784\text{ Nm}<2156\text{Nm ok}$$

满足所有要求，因此选定QXB 80E−121减速机
Since all the requirements have been met, selection of the QXB 80E-121 gear is correct.

7.设计方面注意事项/Installation and assembly

7.1 装配精度 /Assembly accuracy

电动机安装法兰请按以下精度进行设计，如果安装不良，则特别容易造成振动和噪音。

Design motor mounting flange within tolerances shown in figure. Poor assembly accuracy causes vibration and noise.

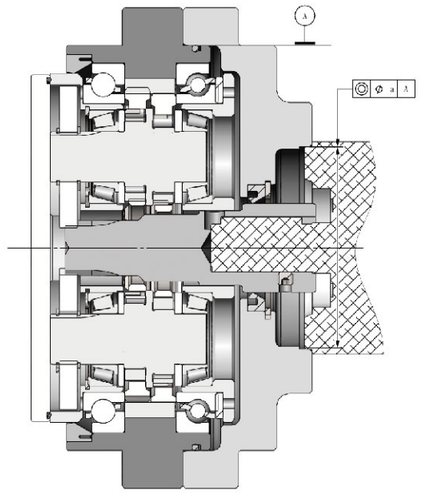

QXB 80E及以下型号装配精度示意图

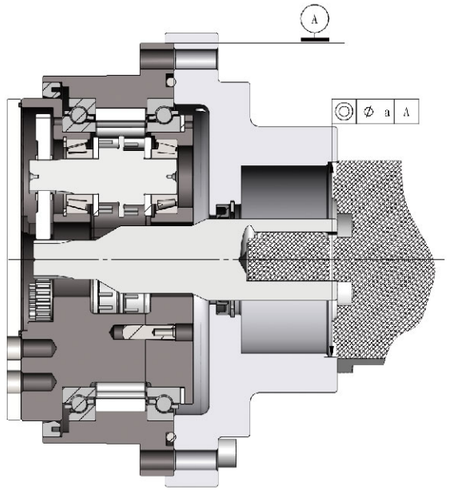

QXB 110E及以上型号装配精度示意图

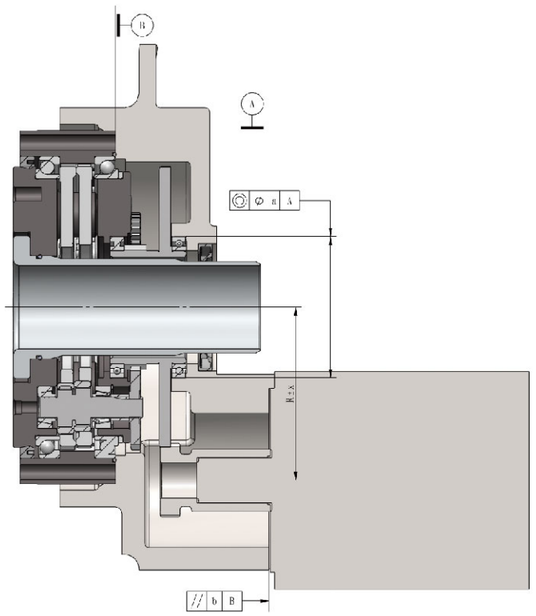

QXB 100C装配精度示意图

型号/model	同轴度/ Concentricity max a(mm)	平行度/Parallelism max b(mm)	中心距公差/ Center to center distance max X(mm)
QXB 20E	0.03		
QXB 40E/40CS	0.03		
QXB 80E/80CS	0.03		
QXB 110E	0.03		
QXB 160E	0.05		
QXB 320E	0.05		
QXB 100C	0.03	0.03	±0.03

7.2 O型圈的安装/ Installation example of O-ring

下图表示了QXB 减速机O型圈的密封位置，请参照图中的位置安装O型圈。O型圈的型号如下表所示。

The following fig shows the O-ring position of the QXB rednc-tion gears. Be sure that the O-ring is assembled as shown in the figure. The following table shows the dimensions of O-ring.

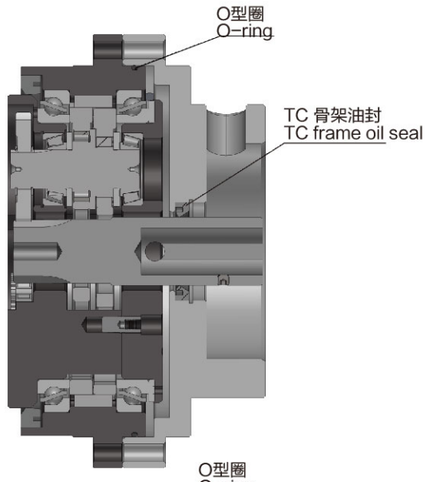

E series

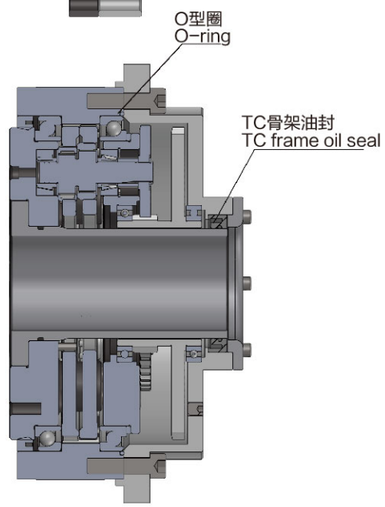

C series

型号/model	O型圈规格 Specifications of O－ring	O 型圈 O－ring	型号/model	O型圈规格 Specifications of O－ring	O 型圈 O－ring
QXB 20E	内径 /wire dia.(mm)	120	QXB 160E	内径 /wire dia.(mm)	219.3
	线径 /I.D.(mm)	2		线径 /I.D.(mm)	5.7
QXB40E/40CS	内径 /wire dia.(mm)	155	QXB320E	内径 /wire dia.(mm)	265
	线径 /I.D.(mm)	2.65		线径 /I.D.(mm)	5.3
QXB80E/80CS	内径 /wire dia.(mm)	182.5	QXB100C	内径 /wire dia.(mm)	215.57
	线径 /I.D.(mm)	3.55		线径 /I.D.(mm)	2.65
QXB110E	内径 /wire dia.(mm)	184.3			
	线径 /I.D.(mm)	5.7			

7.3 螺栓的紧固扭矩/Bolt tightening torque

在安装减速机及负载安装在减速机输出轴上时，请使用内六角螺栓，建议使用内六角扭矩扳手按照下表的紧固扭矩拧紧。

When install the QXB reduction gear or fixed the load to the reduction gear, please use hexagonal socket bolts to assemble QXB reduction gear and tighten to the torque as specified below.

内六角螺钉公称尺寸X螺距	紧固扭矩（Nm）	紧固力F(N)	使用螺钉的标准
M5 X 0.8	9.01± 0.49	9310	内六角圆柱头螺钉 GB/T 70.1-2000 强度等级：12.9
M6 X 1	15.6± 0.78	13180	
M8 X 1.25	37.2 ± 1.86	23960	
M10 X1.5	73.5 ± 3.43	38080	
M12 X 1.75	128.4 ± 6.37	55100	
M14X 2	204.8 ± 10.2	75860	
M16 X 2	318.5 ± 15.9	103410	

7.4 输入齿轮的安装/Installation of input shaft

QXB 40E系列减速机的行星齿轮是两个，装配输入轴时请特别注意。

安装时保证法兰面紧密接触没有发生倾斜。当输入齿轮与行星齿轮不能正确啮合时，请沿圆周方向变换角度插入，严禁使用螺栓等强行带进。法兰面倾斜时，有可能造成下图所示的状态。

QXB 40E have two spur gear. Special care must be used when installing the input gear to prevent misalignment.

When installing the motor flange, make sure that the motor flange is fitted closely and squarely. If the input gear does not engage with the spur gear, inserting the input gear by turning it clockwise or counterclockwise a little. Do not tighten motor with screws unless the motor is properly aligned. If the motor flange is at an angle, there is a possibility that the input gear is installed

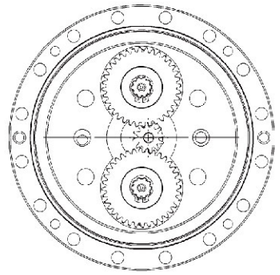

错误的装配位置
Incorrect position

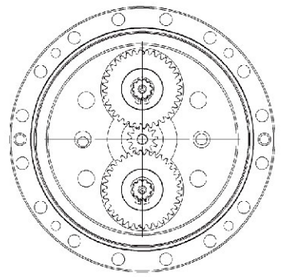

正确的装配位置
Correct position of assembled input gear

7.5 减速机的润滑/lubrication of reduction gear

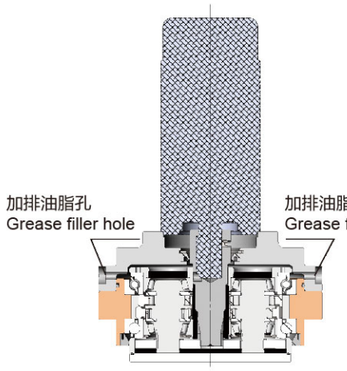

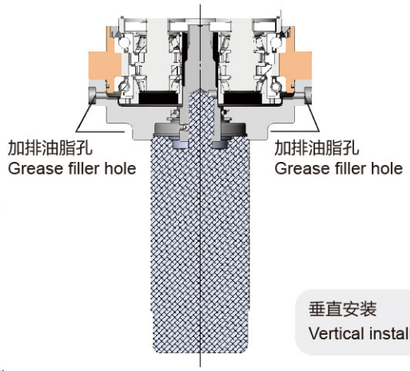

垂直安装
Vertical installation

水平安装
Horizontal installation

型号 /model	润滑油 /lubrication: Molywhite RE00			
	水平安装 /horizontal installation		竖直安装 /vertical installation	
	注油量 /grease level		注油量 /grease level	
	cc	g	cc	g
QXB 20E	87	76	100	87
QXB 40E/40CS	195	170	224	178
QXB 80E/80CS	383	333	439	382
QXB 110E	432	376	495	431
QXB 160E	630	548	694	604
QXB 320E	1040	905	1193	1038
QXB 100C	756	658	857	746

8. 使用注意事项

● 请在温度环境-10℃~40℃环境中使用本产品，勿将本产品用于户外、易燃易爆及腐蚀性氛围中，若要使用至特殊场合，请向本公司咨询；

● 本产品的故障或控制错乱均可能导致人身伤害，当本产品使用于影响人身安全环境的应用场合时，请认真研究设计的可靠性；

●本产品是在严格管控下制造，但设计错误、安装错误、使用环境未达到产品要求仍可能导致设备损坏及人身事故，请实施必要的安全措施；

● 当使用时旋转角度范围较小（10° ）时，由于润滑不良及内部部件应力集中，有可能导致产品损坏；

●新减速机安装后即出现异响、振动、运转不畅等异常时，请按以下项目进行检查：

☐ 安装法兰精度是否满足要求

☐ 输入齿轮的精度、齿数、变位系数是否吻合？是否正确牢靠地安装在电机上?

☐ 是否按规定注入足量的润滑剂?

☐ 设备的输入输出轴（电机侧及减速输出侧）是否发生碰撞?

☐ 电机的参数配置是否正确?

☐ 螺栓安装数量是否足够，是否按照规定的扭力拧紧?

☐ 减速机与电机连成的轴线与安装面是否不垂直?

☐ 设备负荷是否超出了设计值（扭转力矩、轴向负荷、力矩载荷）?

☐ 是否存在电机的共振?

☐ 输入齿轮齿面是否有破损或异常压痕?

9. 质量保证

● 本产品的质保期为壹年，根据本公司的确认确是由于本公司的设计或制造方面的原因导致产品发生故障时，将免费对产品进行维修或更换；

● 属于以下任何一种情况使用导致产品损坏的不在保修范围之内：

■ 超出制定使用条件或规格书制定的范围情况使用；

■ 客户现场安装过程进入异物导致减速机损坏情形；

■ 经由非本公司人员拆卸、组装、修理、改造情形；

■ 外部较大受力（如猛烈撞击、跌落）导致产品损坏的情形；

■ 火灾、地震、雷击、水灾及其他不可抗力导致设备故障时；

■ 其他非本产品设计或制造原因导致设备故障时

10. 维护与保养

● 本产品开封后，若未及时使用，请做好防锈措施；

● 润滑脂的标准更换时间为20000小时，若减速机的表面温度达到40℃以上时，请确认润滑剂的老化及污染，并缩短润滑剂的使用周期；

● 请注意确保减速机表面温度小于60℃，若表面温度超过60℃，请检查是否与减速机连接的零部件精度是否符合要求（特别是安装法兰及输入轴）；

● 当运转一段时间后出现异常，请按照以下项目逐项检查

☐ 设备的运转时间是否超出了理论寿命时间?

☐ 运转时减速机表面温度是否高于之前正常时候?

☐ 运转环境是否发生改变?

☐ 螺栓是否有脱落或松开?

☐ 设备负荷是否超出了设计值（扭转力矩、轴向负荷、力矩载荷）?

☐ 设备的驱动组件是否发生碰撞?

光腾智能机械 QUANTA MACHINERY CO.,LTD.

减速机应用技术参数确认表

1.使用行业：☐Robot ☐机床 ☐ 机械设备

☐AGV ☐RGV ☐ 液压与气动

☐工程机械 ☐其他_____

设备名称：_____

应用场合：_____

2.选用型号：_____

3.负载条件：

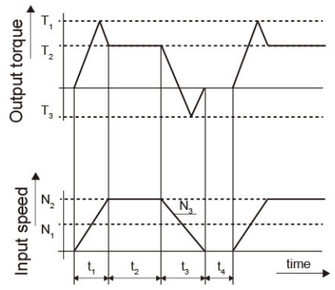

	启动	稳定	停止	间歇
负载转矩 Nm	T_1: _____	T_2: _____	T_3: _____	
转速 r/min	N_1: _____	N_2: _____	N_3: _____	
时间 sec	t_1: _____	t_2: _____	t_3: _____	t_4: _____

4.外部负载：

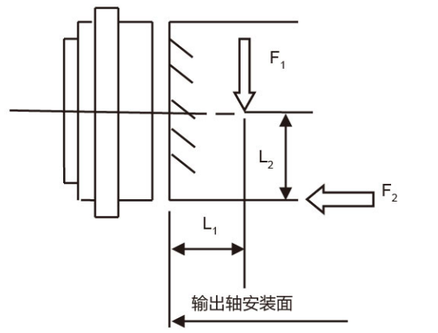

F_1: _____ F_2: _____

L_1: _____ L_2: _____

5.使用环境：环境温度 _____ ℃

6.安装方式：

☐水平安装 ☐垂直安装（电机在上） ☐垂直安装（电机在下）

安装图：

7.输入齿轮：

☐标准：_____

☐非标：_____

a)长度：_____ b)最大直径：_____

输入轴要求尺寸图：

8.驱动参数：

☐伺服电机

☐直流伺服电机

功率：_____ 额定转矩：_____转速：_____

电机轴：请尽可能详细描述，有可能造成无法匹配

电机轴尺寸：直径 _____

☐花键 _____ ☐光轴_____ ☐键槽 _____

电机轴尺寸图

Application Worksheet

1. Application area:

☐Robot ☐Machine tools ☐Mechanical equipment

☐AGV ☐RGV ☐Fluid drive ☐Project machine

☐Others _____

Device name: _____

2. Choose Model: QXB _____

3. Conditions of load: _____

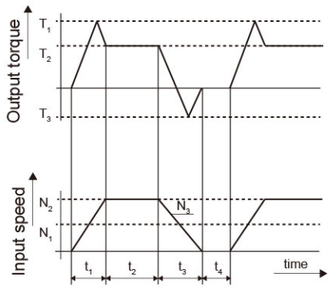

	For starting (MAX)	For constble speed	For stopping (MAX)	Cycle time
Load torque (Nm)	T_1: _____	T_2: _____	T_3: _____	
Speed (rpm)	N_1: _____	N_2: _____	N_3: _____	
Time (S)	t_1: _____	t_2: _____	t_3: _____	t_4: _____

4. External Load Conditions

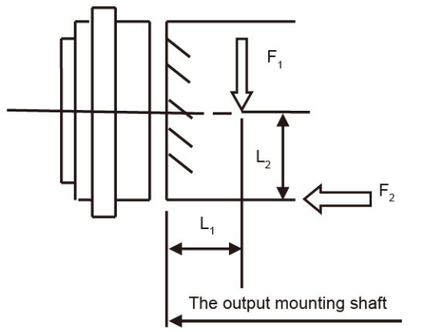

F_1: _____ F_2: _____

L_1: _____ L_2: _____

5. Temperature: environment temperature _____℃

6. Installation

☐Horizontal

☐Vertical (Upper motor) ☐Vertical (Lower Motor)

Illustration for installation

7. Input Gear Specitication

Reduction speed ratio: i= _____

☐Standard size ☐QM Corporation

☐Prepared by user ☐Other Input gear

Required dimension of input gear (Illustration)

8. Driving Portion (Servo Motor)

Manufacturer : _____

Model : _____

Capacity:_____KW Rated torque:_____Nm

Speed:_____r/min

Shape of the shaft ☐with keyway

☐without keyway ☐Straight ☐Taper

The motor shaft

光腾智能机械 QUANTA MACHINERY CO.,LTD.

8.Instructions for application

●Product only can be used in a location where there is no risk of explosion under the following conditions: Temperature range of the ambient air: -10°C to +40°C;

●Ensure that other people who spend time in the working area are not inconvenienced by reducer ; It can cause you to get a shock and lead to accidents

●If the end user of the product is a military interest or if the product is used to manufacture weapons, the product may be subjected to export regulations prescribed in the Foreign Trade Control Act. Inspect the conditions before exporting the product and follow the necessary procedures.

●If failure or malfunction of the product may directly affect people's lives or if it is used for units, which may damage the human body (atomic facilities, space equipment, medical equipment, various safety units, etc.), examination is required every time. Contact us in such a case.

●Though this product has been manufactured under strict quality control, if it is to be used for such machines that serious damage of people's lives or facilities may result due to its failure, please provide appropriate safety means.

●When this product is used in special environment (clean room, foods, etc.), please contact our agent or your nearest business office.

●When this product is used for the angle smaller (less than 10 °), internal components become stress concentration due to poor lubrication, it may result in product damage.

●Repair and modifications may only be carried out by authorized, trained, specialist staff ! The warranty becomes null and void in the event of unauthorized interference.

●Any person involved in operation, maintenance and repair must read and follow instructions, especially the safety precautions.

● After opening the packing, please get the antirust measures if not used promptly.

●The standard of grease replacement is 20000 hours, when the surface temperature is above 40°C, please check the ageing and contamination of lubricetion.

9.Warranty

Qutanta machinery Co., Ltd. guaranties that the reduction gears of the model QXB are free from defects of materials and workmanship.

The term of guarantee shall be one year after delivery or 2,000 hours of operation after the installation on an actual machine, whichever earlier, on condition that the product is operated under the rated operation conditions specified by us, in normal assembly and lubrication condition.

If any defect in materials or workmanship is detected during the above guarantee term, the product will be repaired or substituted at our expense, provided that the No. of man-hour required for demounting and remounting the product from the machine, transportation expense for redelivery, warehousing and other incidental expenses shall be excluded from our obligation.

No expenses for damages of the machine due to shutdown of operation attributable to defect of the product are guaranteed.

If the guarantee is accomplished with money, the upper limit of the amount shall not exceed the selling price of that claimed product.

The warranty period for this product is one year, after our recognition, if damage was due to our's design or manufacture, it will be free to repair or replacement of the product

10.Maintenance

The trouble started immediately after installation of the reduction gear, such as abnormal noise, vibration, etc.,please check the following items:

□ Beyond the conditions or specifications described;

□ Gearbox demage caused by external things, not by our company personel;

□ By way of the disassembly, Assembly, repair, remodeling of the company personnel;

□ Larger external forces (such as crashing, dropping) cause damage to the product;

□ Fires, earthquakes, lightning, floods, and other force majeure lead to equipment failure;

□ Other non-product design or manufacturing reasons equipment failure

□ Confirm that the equipment's drive section (the motor side or the reduction gear output surface side) is not interferred with another component.

□ Confirm that the equipment is not under a greater than expected load (torque, moment load, thrust load).

□ Confirm that the required numbers of bolts are tightened uniformly with the tightening torque.

□ Confirm that the reduction gear, motor, or your company's components are not installed at a slant.

□ Confirm that the enough amount of special lubricant has been added.

□ Confirm that there are no problems with the motor's parameter settings.

□ Confirm that there are no resonance of machine.

□ Confirm that the input gear is appropriately installed on the motor.

□ Confirm that there is no damage in the surface of the input gear teeth.

□ Confirm that the input gear speciation (precision, number of teeth, module, shift coefficient, dimensions of each part) are correct.

□ Confirm that the flange and other components are designed and manufactured with the correct tolerances.

When trouble started during operation, please as follow check

□ Confirm that the equipment has not been in operated longer than the calculated service life.

□ Confirm that the surface temperature of the reduction gear is not higher than normal during operation.

□ Confirm that the operation conditions have not been changed.

□ Confirm that there are no loose or missing bolts.

□ Confirm that the equipment is not under a greater than expected load (torque, moment load, thrust load).

□ Confirm that the equipment's drive section is not interfering with another component.

□ Confirm that there is no oil leaking.

□ Confirm that there are no external contaminants in the gear, such as moisture or metal powder.

□ Confirm that no other lubricant used as required.

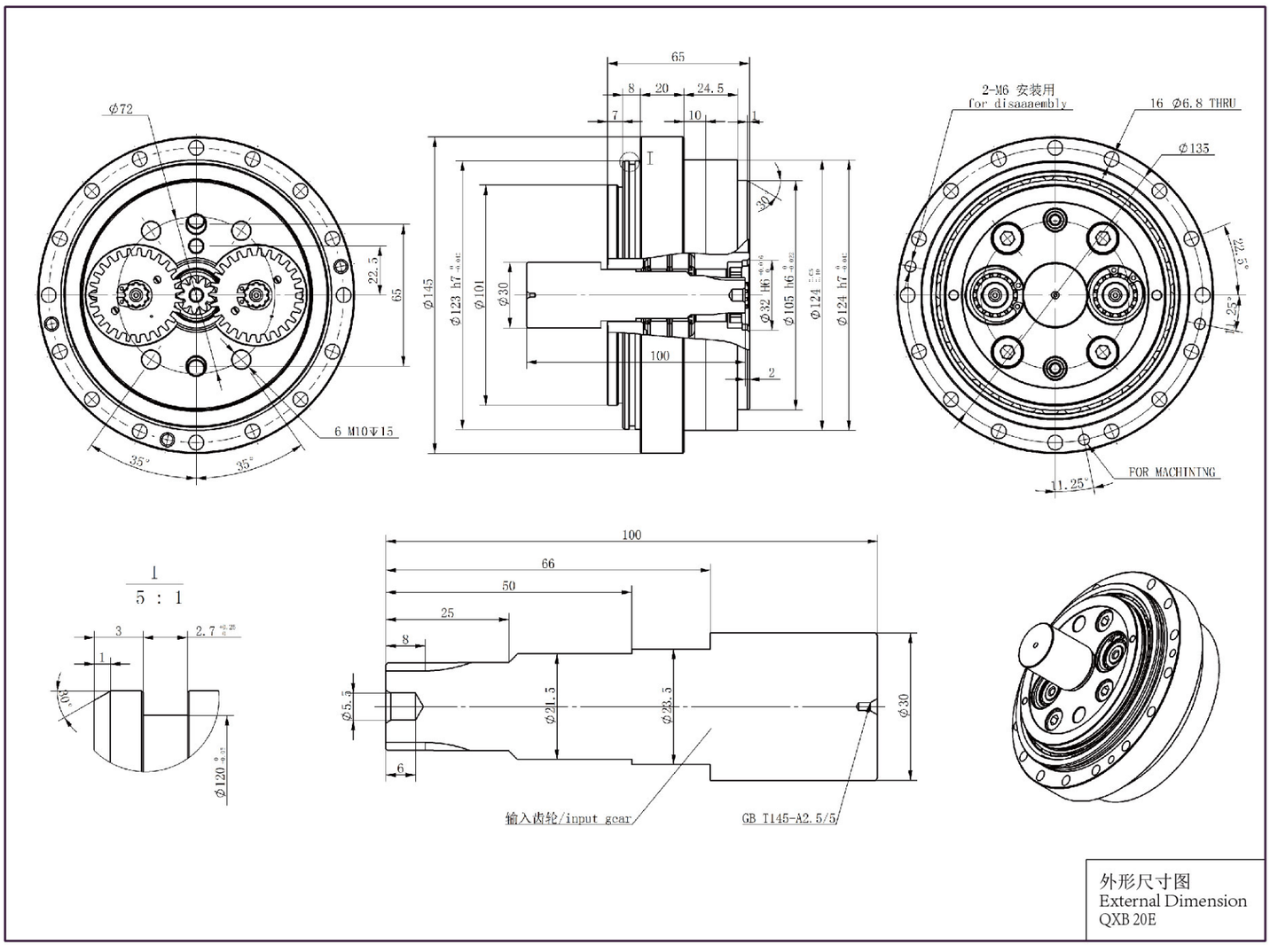

外形尺寸图
External Dimension
QXB 20E

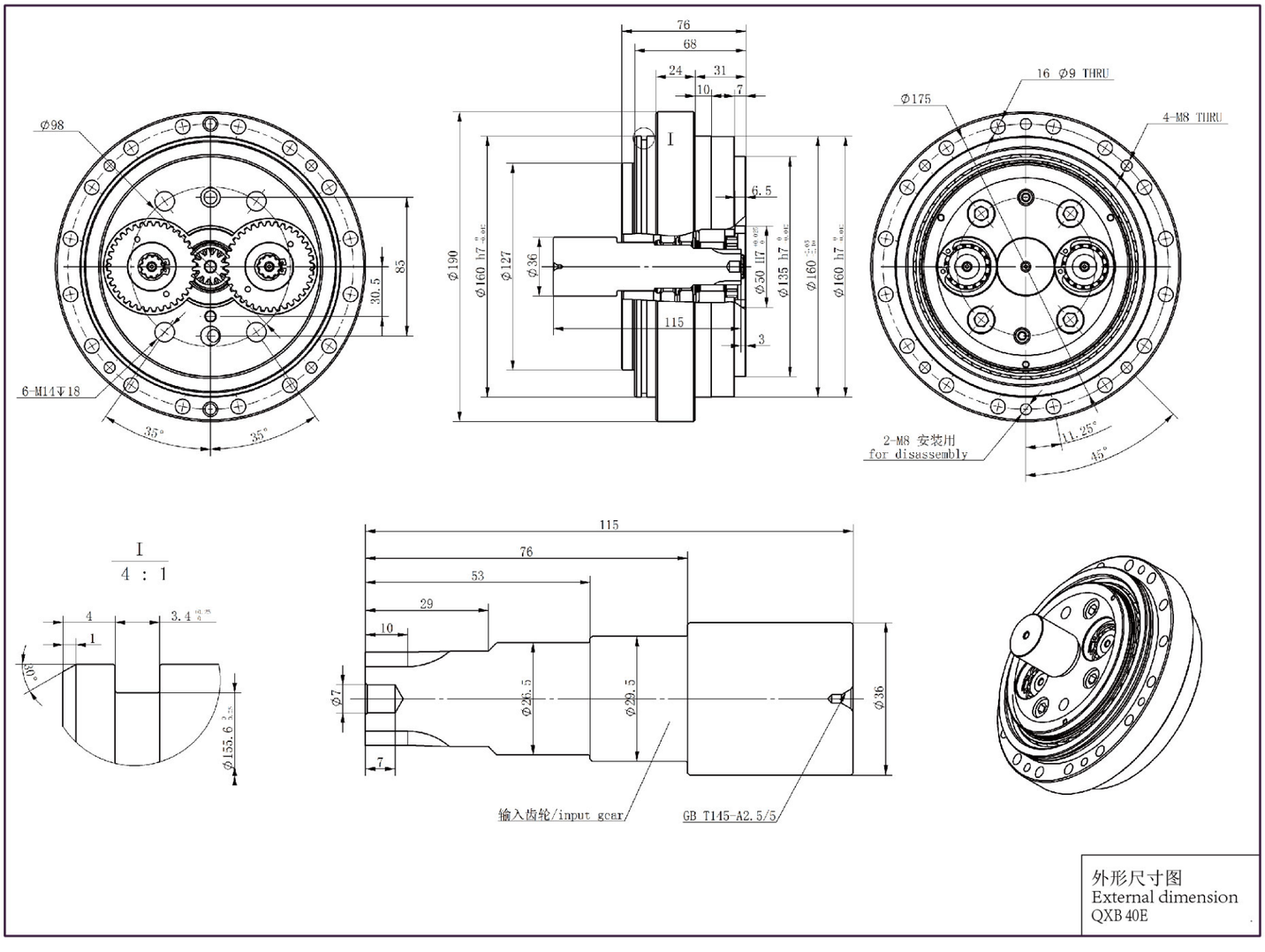

外形尺寸图
External dimension
QXB 40E

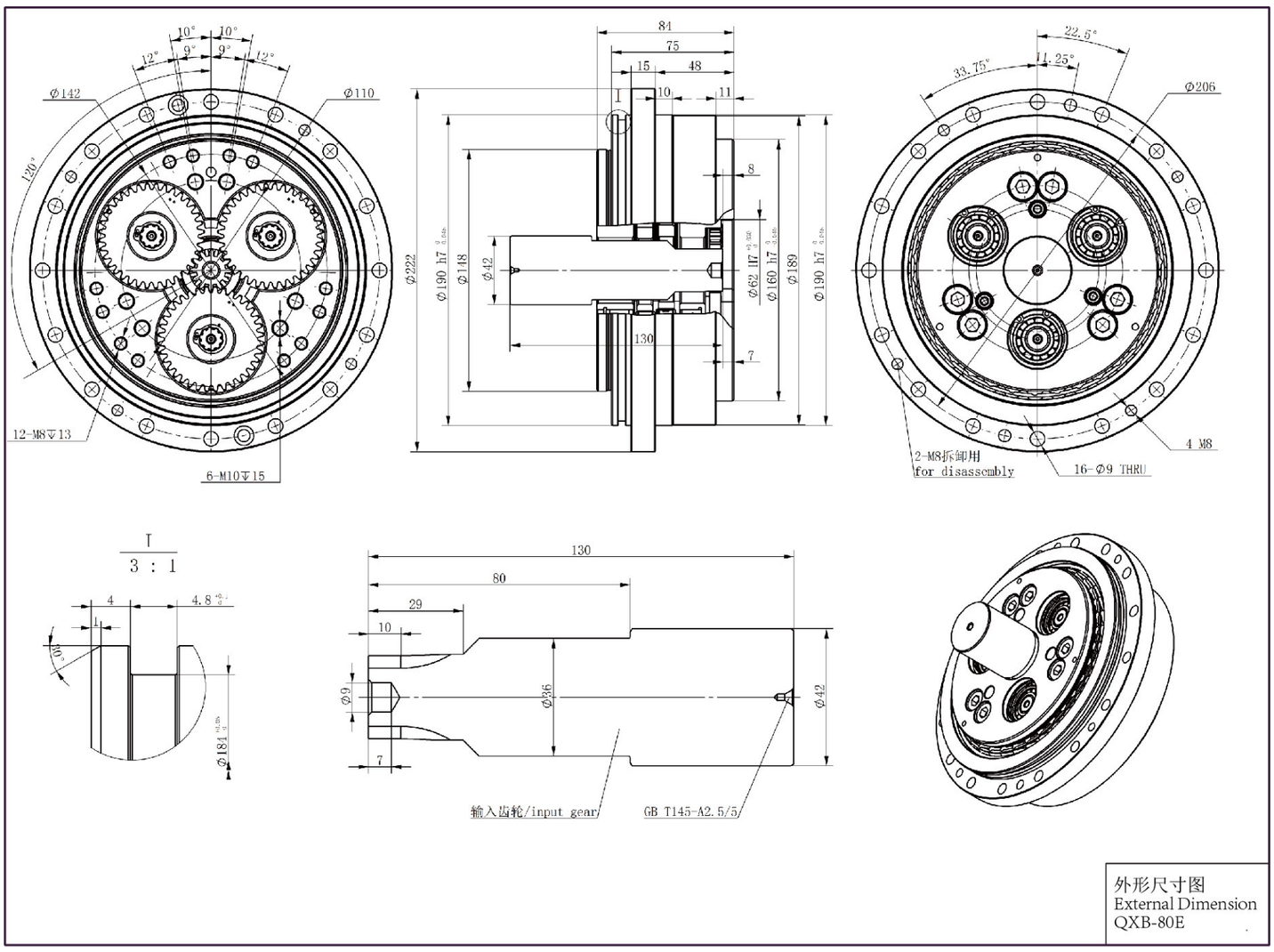

外形尺寸图
External Dimension
QXB-80E

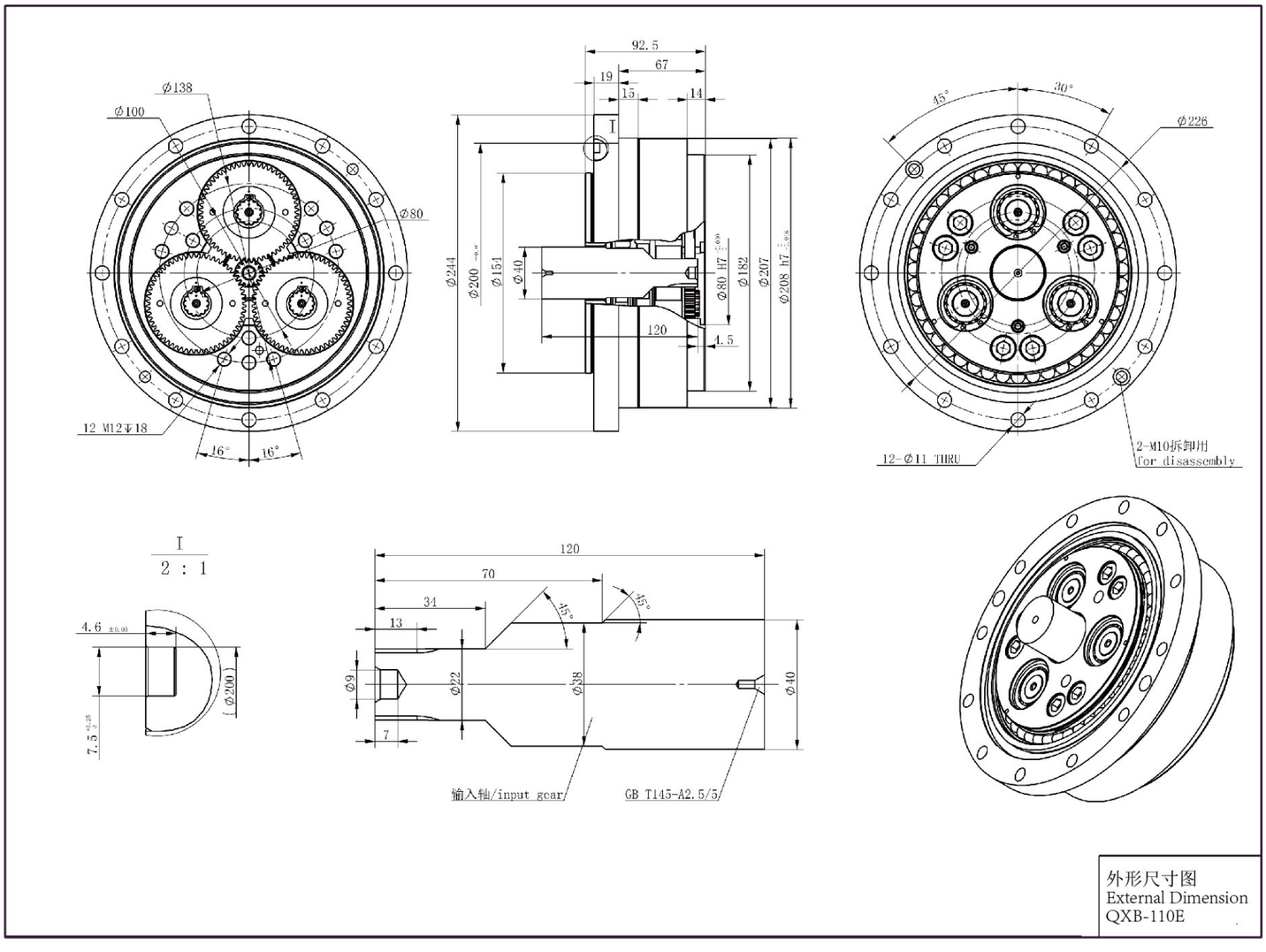

外形尺寸图
External Dimension
QXB-110E

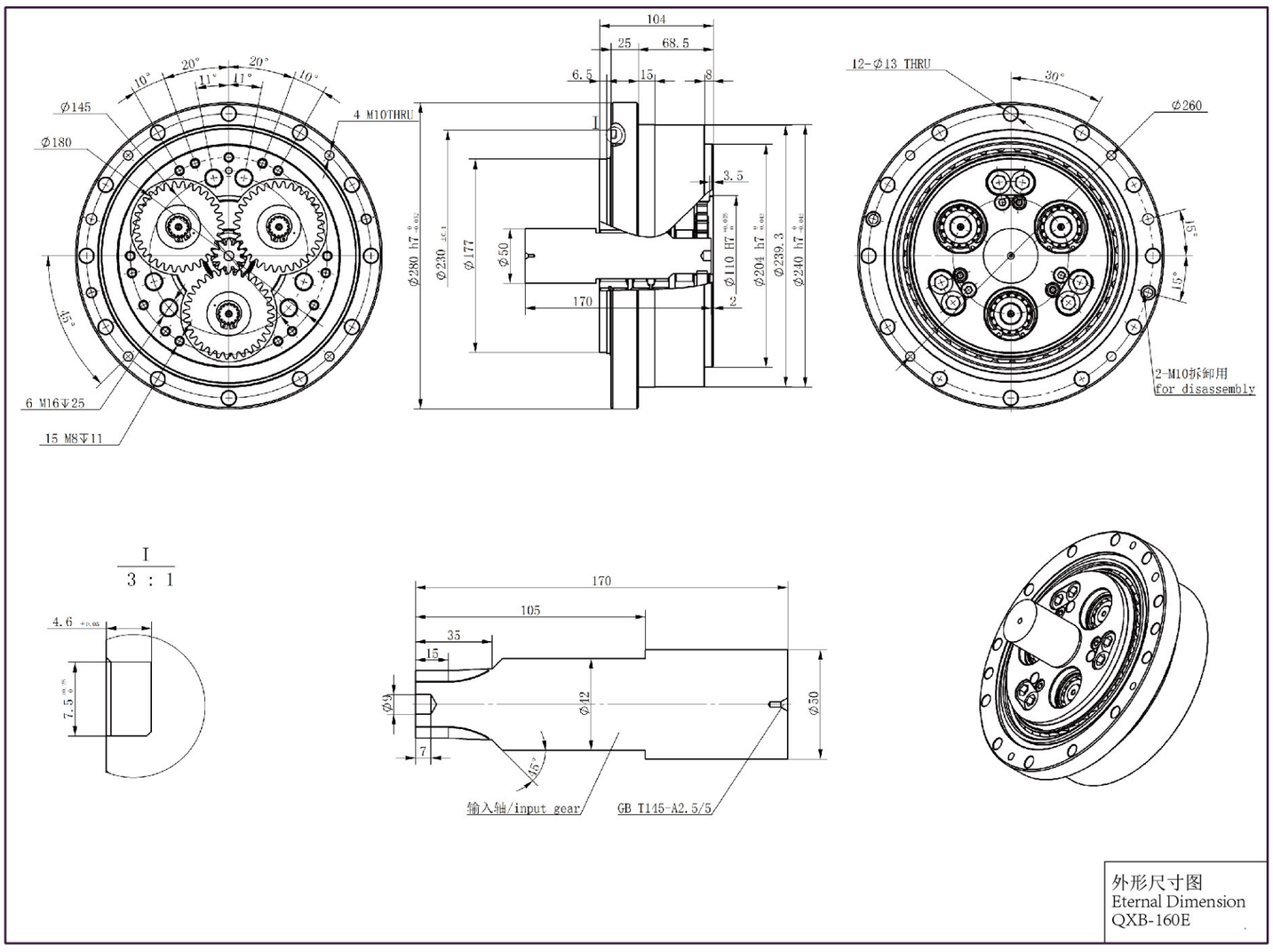

外形尺寸图
Eternal Dimension
QXB-160E

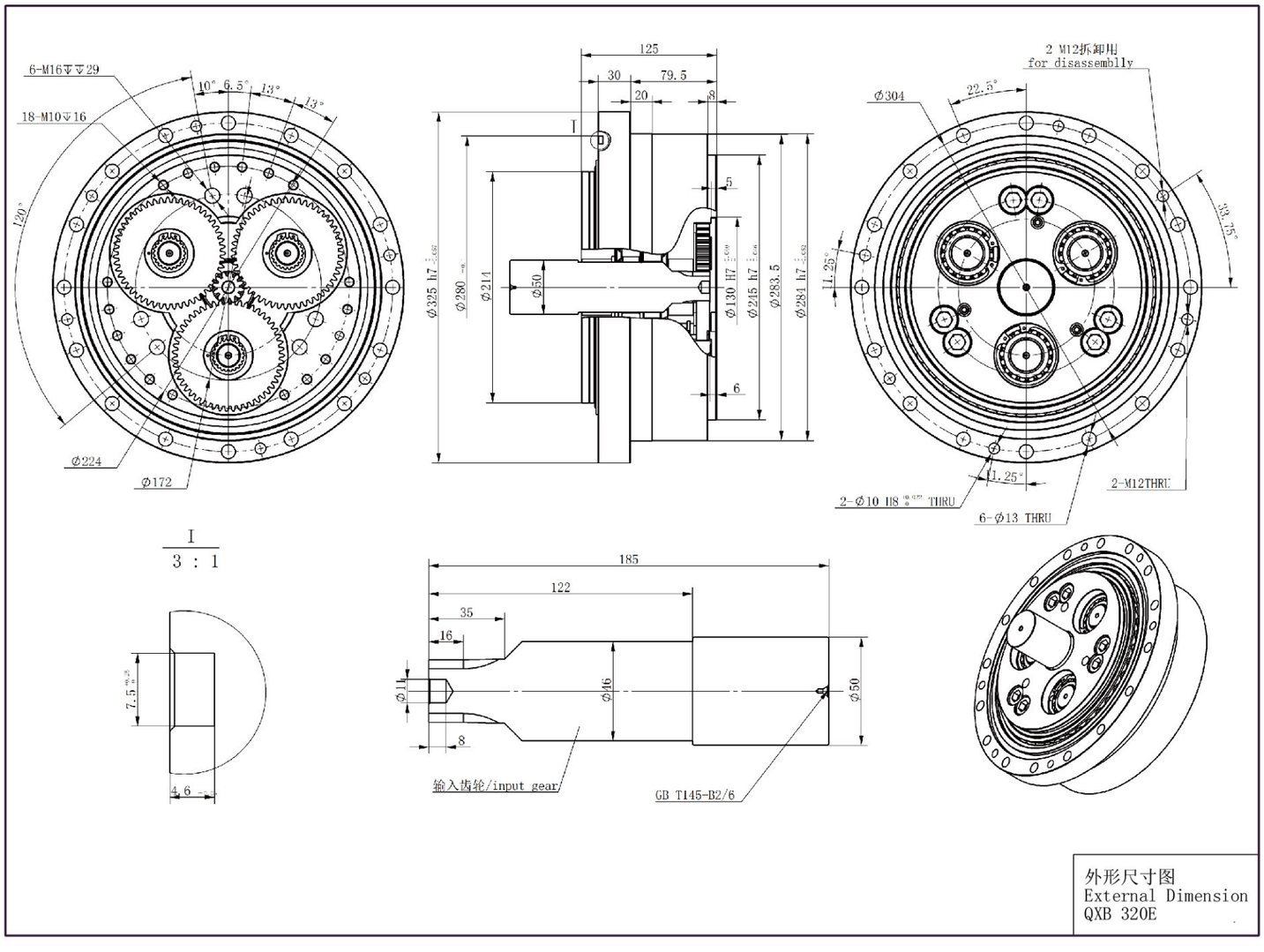

外形尺寸图
External Dimension
QXB 320E

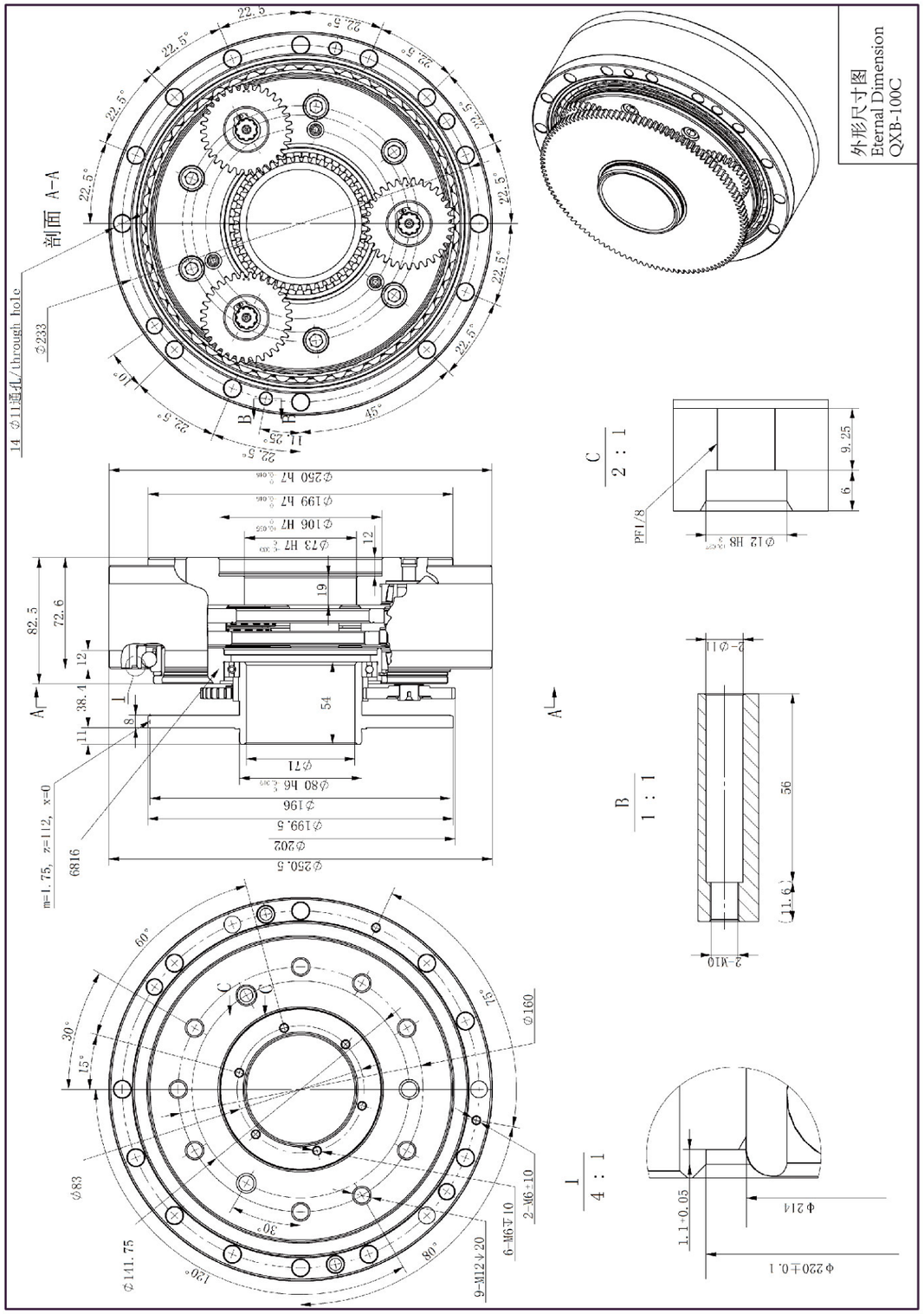

外形尺寸图
Eternal Dimension
QXB-100C

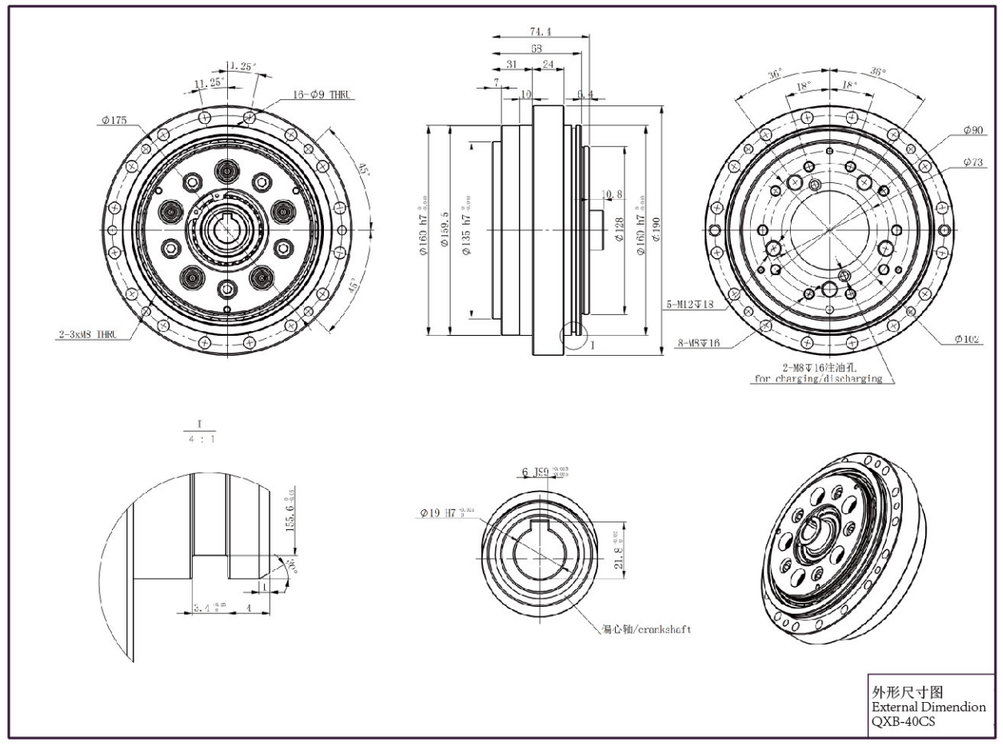

外形尺寸图
External Dimendion
QXB-40CS

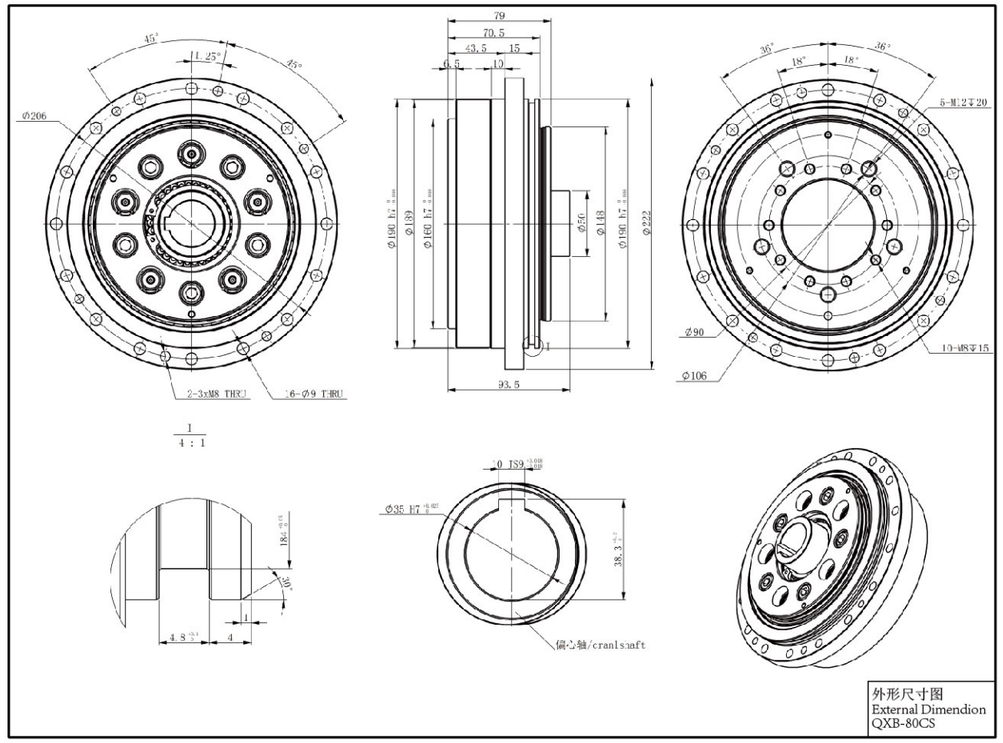

外形尺寸图
External Dimendion
QXB-80CS